World Para Athletics

World Para Athletics

Rules and Regulations

June 2022

World Para Athletics

www.WorldParaAthletics.org

@ParaAthletics @ParaAthletics /ParaAthletics

World Para Athletics

World Para Athletics Rules and Regulations 2022

June 2022

Changes to these Rules and Regulations

Please note that these rules may be changed at any time as a result, for example, of changes in the World Athletics rules, or classification related matter or where World Para Athletics otherwise considers it necessary to do so.

WORLD PARA ATHLETICS CLASSIFICATION RULES AND REGULATIONS

The World Para Athletics Classification Rules and Regulations are an integral part of these Rules and Regulations, available at

https://www.paralympic.org/athletics/rules

PART A – GENERAL 8
1 Definitions 8
2 General Provisions 10
2.1 Scope and application 10
2.2 Interpretation 11
2.3 Governance 11
2.4 Printing of the Rules 11
2.5 Amendments to the Rules 12
PART B – WORLD PARA ATHLETICS REGULATIONS 13
3 World Para Athletics Recognised Competitions 13
3.1 Competition levels 13
3.2 Competition cycle 14
3.3 Competition management 14
3.4 Competition entries 15
3.5 Recognition of results 15
3.6 Advertising and displays during Competitions 16
3.7 Anti-gambling requirements 16
4 Eligibility & Classification 16
4.1 Eligibility requirements – IPC Games 16
4.2 Eligibility requirements – IPC Competitions and World Para Athletics Sanctioned Competitions 16
4.3 Eligibility requirements – World Para Athletics Approved Competitions 17
4.4 Qualification requirements 17
4.5 Gender 18
4.6 Classification 18

5 Anti-Doping 19
5.1 Anti-Doping requirements 19
6 Medical 19
6.1 Medical requirements 19
6.2 Medical responsibilities 19
6.3 Medical withdrawal request 20
6.4 Medical insurance 21
6.5 Medical and safety services at IPC Games, IPC Competitions and World Para Athletics Sanctioned Competitions 22
6.6 Harassment 22
6.7 Autonomic dysreflexia 22
6.8 Hypoxic or hyperoxic chambers or tents 23
6.9 Heat 23
6.10 Smoking Ban 23
7 Technology and Equipment 23
7.1 Fundamental principles 23
7.2 Monitoring of the use of technology and equipment 23
7.3 Prohibited technology 24
8 Disciplinary rules 25
8.1 The IPC Code of Ethics and the World Para Athletics Code of Conduct 25
9 Protests & Appeals 25
9.1 Field of play 25
9.2 Anti-doping 25
9.3 Classification 26
PART C – WORLD PARA ATHLETICS COMPETITION RULES 27
SECTION I – INTERNATIONAL OFFICIALS 27

Rule 1: Appointment of Officials 27
Rule 2: Description of Officials and Their Duties 28
2.1 Technical Delegate 28
2.2 Medical Delegate 29
2.3 Doping Control Delegate 31
2.4 International Technical Officials (ITOs) 31
2.5 International Road Course Measurer 32
2.6 International Starter and International Photo Finish Judge 32
2.7 Jury of Appeal 33
2.8 Officials of the Competition 34
2.9 Competition Director 36
2.10 Meeting Manager 37
2.11 Technical Manager 38
2.12 Event Presentation Manager 39
2.13 Referees 40
2.14 Judges 44
2.15 Umpires (Running and Wheelchair Racing Events) 45
2.16 Timekeepers and Photo Finish and Transponder Timing Judges 46
2.17 Start Co-ordinator, Starter and Recallers 47
2.18 Starter's Assistants 49
2.19 Lap Scorers 49
2.20 Competition Secretary, Technical Information Centre (TIC) 50
2.21 Marshal 52
2.22 Wind Gauge Operator 53
2.23 Measurement Judge (Scientific) 53
2.24 Call Room Judges 54

2.25 Advertising Commissioner 56
2.26 Chief Classifier 56
2.27 International Classifiers 56
SECTION II – GENERAL COMPETITION RULES 57
Rule 3: The Athletics Facility 57
Rule 4: Age, Gender Categories and Mixed Competition 57
Rule 5: Entries 60
Rule 6: Clothing, Shoes, Athlete Bibs, Prosthetics and Orthotics, Eye mask, Tether, Non-compliance on Equipment and Helmets 63
Rule 7: Assistance to Athletes 78
Rule 8: Effect of Disqualification 89
Rule 9: Competing Outside Sport Class – Eligibility 90
Rule 10: Surveying and Measurements 90
Rule 11: Validity of Performances 91
Rule 12: Video Recording 92
Rule 13: Scoring 93
Rule 14: Wheelchair and Frame Running Requirements 94
SECTION III – TRACK EVENTS 100
Rule 15: Track Measurements 100
Rule 16: Starting Blocks 102
Rule 17: The Start 104
Rule 18: The Race 111
Rule 19: The Finish 120
Rule 20: Timing and Photo Finish 121
Rule 21: Seedings, Draws and Qualification in Track Events 126
Rule 22: Ties 139

Rule 23: Relay Races 140
SECTION IV - FIELD EVENTS 148
Rule 24: General Conditions 148
A. VERTICAL JUMP 160
Rule 25: General Conditions 160
Rule 26: High Jump 165
B. HORIZONTAL JUMPS 170
Rule 27: General Conditions 170
Rule 28: Long Jump 175
Rule 29: Triple Jump 178
C. THROWING EVENTS FOR AMBULANT ATHLETES 180
Rule 30: General Conditions 180
Rule 31: Shot Put 191
Rule 32: Discus Throw 194
Rule 33: Javelin Throw 203
D. THROWING EVENTS FOR SEATED ATHLETES 210
Rule 34: General Conditions 210
Rule 35: Seated Throwing Requirements 213
Rule 36: Seated Throwing Technique, Lifting and Failure 217
Rule 37: Club Throw 220
SECTION V – INDOOR COMPETITIONS 224
Rule 38: Applicability of Outdoor Rules to Indoor Competitions 224
Rule 39: The Indoor Stadium 224
Rule 40: The Straight Track 225
Rule 41: The Oval Track and Lanes 226
Rule 42: Start and Finish on the Oval Track 228

Rule 43: Seeding, Draws and Qualification in Track Event 230
Rule 44: Spike Length..... 234
Rule 45: Relay Races..... 234
Rule 46: High Jump 235
Rule 47: Horizontal Jumps..... 235
Rule 48: Shot Put 236
SECTION VI - ROAD RACES..... 238
Rule 49: Road Races 238
SECTION VII - PROTESTS AND APPEALS..... 247
Rule 50: Protests and Appeals 247
SECTION VIII - WORLD AND REGIONAL RECORDS 253
Rule 51: World and Regional Records 253
SECTION IX - AWARDING MEDALS AND DIPLOMAS..... 260
Rule 52: Awarding Medals and Diplomas 260
APPENDIX 1..... 262
WORLD PARA ATHLETICS IMPLEMENT WEIGHTS FOR SPORT CLASSES..... 262
APPENDIX 2..... 267
Classification Hierarchy Table 1 – Paralympic Games and World Championships 267
Classification Hierarchy Table 2 – Regional Championships and Regional Games..... 268

PART A – GENERAL

1 Definitions

Classification: grouping athletes into Sport Classes (as defined in the IPC Athlete Classification Code) according to how much their impairment affects fundamental activities in each specific sport or discipline. This is also referred to as "Athlete Classification".

Competition: a series of individual events conducted together under one ruling body.

Competition Medical Director: the person appointed by the LOC for an IPC Competition and/or a World Para Athletics Sanctioned Competition who is responsible to implement the World Para Athletics 'Scope of Event Medical Services'.

Competition Rules: the World Para Athletics Competition Rules set out in Part C of these Rules.

International Federation: a sport federation recognised by the IPC as the sole world-wide representative of a sport for athletes with an impairment that has been granted the status as a Para sport by the IPC. The IPC and IOSD act as an International Federation for certain Para sports.

IOC: the International Olympic Committee.

IPC: the International Paralympic Committee.

IPC Competitions: World Para Athletics Championships and World Para Athletics Regional Championships.

IPC Games: the Paralympic Games and the Parapan American Games.

IOSD: International Organisation of Sport for the Disabled, an independent organisation recognised by the IPC as the sole worldwide representative for a specific impairment group to the IPC.

LOC: Local Organising Committee – an organisation appointed by World Para Athletics to organise an IPC Competition or World Para Athletics Sanctioned Competition.

LOC Chief Medical Doctor: the medical doctor appointed by the LOC for an IPC Competition and/or World Para Athletics Sanctioned Competition.

National Federation: the national member of an International Federation.

NPC: National Paralympic Committee, the national member of the IPC who is the sole

representative of athletes with an impairment in that country or territory. These are the national members of the IPC.

Orthosis: an orthopaedic appliance or apparatus used to assist functioning in a limb that is anatomically intact but which has impaired range of movement, muscle power or leg length difference.

Para sport: a sport governed by the IPC Athlete Classification Code and recognised as a Para sport by the IPC.

Prosthesis: An artificial device that replaces a missing body part, which may be lost through trauma, disease, or congenital conditions.

Referee: the person appointed to adjudicate World Para Athletics Recognised Competitions.

Regulations: the World Para Athletics Regulations set out in Part B of these Rules.

Rules: the World Para Athletics Rules and Regulations comprised of the General Provisions, the World Para Athletics Regulations and the World Para Athletics Competition Rules.

Sport Class: a category for Competition defined by World Para Athletics by reference to the extent to which an athlete can perform the specific tasks and activities required by a Para sport.

Sport Class Status: a designation applied to a Sport Class to indicate the extent to which an athlete may be required to undertake athlete evaluation and/or be subject to a classification protest.

WADC: the World Anti-Doping Code.

World Athletics: formerly known as the International Athletics Association Federation (IAAF).

World Athletics Rules: formerly known as the International Athletics Association Federation Competition Rules.

WPA: World Para Athletics.

World Para Athletics Approved Competitions: international, national, endorsed and World Athletics endorsed competitions for the sport of Para Athletics that have been approved by World Para Athletics.

World Para Athletics Athlete License: a license issued by the IPC in accordance with the IPC Athlete Licensing Programme to enable athletes and guide-runners to compete in IPC Games,

IPC Competitions and World Para Athletics Sanctioned Competitions.

World Para Athletics Recognised Competitions: IPC Games**,** IPC Competitions, World Para Athletics Sanctioned Competitions and World Para Athletics Approved Competitions.

World Para Athletics Sanctioned Competitions: World Para Athletics Grand Prix events, World Para Athletics World Cups and other World Para Athletics international competitions determined by World Para Athletics.

World Para Athletics Technical Delegate: a person appointed by World Para Athletics to monitor and oversee a World Para Athletics Recognised Competition and to ensure all technical operations are conducted in accordance with these Rules.

2 General Provisions

2.1 Scope and application

2.1.1 These World Para Athletics Rules and Regulations comprise the World Para Athletics Regulations (Regulations) and the World Para Athletics Competition Rules (Competition Rules) (together referred to as 'these Rules').

2.1.2 These Rules are mandatory for all World Para Athletics Recognised Competitions.

2.1.3 All participants (including, but not limited to, athletes and support personnel, coaches, trainers, managers, interpreters, team staff, officials, medical or paramedical personnel) of any World Para Athletics Recognised Competitions agree to be bound by these Rules as a condition of such participation.

2.1.4 The World Para Athletics Classification Rules and Regulations are an integral part of these Rules and are located on the World Para Athletics website.

2.1.5 The IPC Handbook is an integral part of the governance of the sport of Para Athletics.

2.1.6 Any matter not addressed in these Rules shall be determined by the IPC, in its sole discretion.

2.1.7 These Rules will be effective from 28 June 2022.

2.2 Interpretation

2.2.1 References to a 'Regulation' mean a Regulation referred to in Part B of these Rules, references to a 'Rule' mean a Rule referred to in Part C of these Rules, references to an 'Appendix' means an Appendix to these Rules, and capitalised terms used in these Rules have the meaning given to them in the Definitions section of these Rules.

2.2.2 Any comments annotating various provisions of these Rules shall be used to interpret these Rules.

2.2.3 Headings used in these Rules are used for convenience only and have no meaning that is separate from the Regulation(s) or Rule(s) to which they refer.

2.2.4 Unless otherwise expressly provided for in the Regulations, all references in the Regulations to "athletes" shall also include "guide-runner". This does not apply to Part C of the Rules.

2.2.5 All references to the words "he", "his" or "him" in these Rules also mean the words "she", "hers" or "her".

2.3 Governance

2.3.1 The IPC acts as the International Federation for and governs the sport of Para Athletics. It carries out these responsibilities under the name "World Para Athletics" and the term "World Para Athletics" must be read in these Rules as the IPC and vice versa.

2.4 Printing of the Rules

2.4.1 These Rules are the copyright property of the IPC and have been published for the benefit of NPCs, athletes, officials and others who are engaged in an official capacity with World Para Athletics. These Rules may be reprinted or translated by any organisation with a legitimate need to do so, subject to IPC's continuing ability to assert its copyright in the Rules, including the right to insist on an assignment to the IPC of the copyright in any translated version of these Rules. Any other

organisation must obtain the permission of the IPC prior to reprinting, translating or publishing these Rules.

2.4.2 The English version of these Rules shall be accepted as the authoritative version for the purpose of interpretation.

2.5 Amendments to the Rules

2.5.1 After the conclusion of each Paralympic Games, the IPC shall undertake a review of these Rules, in consultation with NPCs and any relevant IOSDs, in accordance with the IPC Handbook (located on the IPC website). All amendments shall be implemented prior to the start of the second season following the relevant Paralympic Games.

2.5.2 These Rules also may be amended at any time by the IPC as a result, for example, of changes in Classification related matters, the World Athletics Rules, or where World Para Athletics otherwise considers it necessary to do so.

PART B – WORLD PARA ATHLETICS REGULATIONS

3 World Para Athletics Recognised Competitions

3.1 Competition levels

3.1.1 World Para Athletics categorises Competitions based on their scale, size, and nature to determine the applicable requirements at each Competition.

3.1.2 World Para Athletics Recognised Competition levels are as follows:

a) **IPC Games**

- Paralympic Games
- Parapan American Games

b) **IPC Competitions**

- World Para Athletics Championships
- World Para Athletics Regional Championships

c) **World Para Athletics Sanctioned Competitions**

- World Para Athletics Grand Prix events
- World Para Athletics World Cups
- Any other World Para Athletics international competitions determined by World Para Athletics

d) **World Para Athletics Approved Competitions**

- International competitions for the sport of Para Athletics
- National competitions for the sport of Para Athletics
- World Athletics /NF endorsed competitions (as defined in the World Athletics Rules)
- Any other competitions for the sport of Para Athletics determined by World Para Athletics

3.2 Competition cycle

3.2.1 Unless otherwise determined by the IPC, the cycle for IPC Games, IPC Competitions and World Para Athletics Sanctioned Competitions is as follows:

Cycle	Competition
Year 1	World Para Athletics Championships World Para Athletics Grand Prix events World Para Athletics World Cups
Year 2	World Para Athletics Regional Championships World Para Athletics Grand Prix events World Para Athletics World Cups
Year 3	World Para Athletics Championships World Para Athletics Grand Prix events World Para Athletics World Cups
Year 4	Paralympic Games World Para Athletics Regional Championships World Para Athletics Grand Prix events World Para Athletics World Cups

3.3 Competition management

3.3.1 The IPC shall manage all IPC Games.

3.3.2 World Para Athletics shall have the right to manage all IPC Competitions and World Para Athletics Sanctioned Competitions. It also shall have the right to oversee all World Para Athletics Approved Competitions. The words World, Regional and World Para Athletics may not be used in connection with any Para Athletics event without the prior written consent of World Para Athletics. In addition, the IPC is the owner of all rights of whatever kind or nature in respect of the terms “Paralympics" and "Paralympic", the term “Para Athletics” when associated with sport or any IPC activities, the IPC motto, flag and anthem, the Paralympic Symbol (three Agitos design) and any other trademarks, logos and other indicia used or intended to be used in the context of the Paralympic Movement.

3.3.3 World Para Athletics shall enforce these Rules for all World Para Athletics Recognised Competitions. World Para Athletics shall have jurisdiction over all matters not assigned by the Rules to another person or entity (such as an official or LOC).

3.3.4 The events and competition format for all World Para Athletics Recognised Competitions are outlined in the Competition Rules.

3.4 Competition entries

3.4.1 All entries to participate in IPC Competitions and World Para Athletics Sanctioned Competitions must be in accordance with these Rules and the entry criteria outlined on the World Para Athletics website.

3.4.2 The entry criteria and minimum qualifying standards for the IPC Games shall be defined in the qualification criteria outlined on the IPC website.

3.4.3 The entry criteria and minimum qualifying standards for each IPC Competition and World Para Athletics Sanctioned Competition shall be defined in the qualification criteria outlined on the World Para Athletics website.

3.5 Recognition of results

3.5.1 World Para Athletics accepts results achieved at World Para Athletics Recognised Competitions by eligible athletes (in accordance with Regulation 4) solely for the following purposes:

3.5.1.1 World Para Athletics rankings;

3.5.1.2 World Para Athletics records;

3.5.1.3 allocation of NPC qualification slots for IPC Games, IPC Competitions and World Para Athletics Sanctioned Competitions; and/or

3.5.1.4 achieving qualification standards for entry into IPC Games, IPC Competitions and World Para Athletics Sanctioned Competitions.

3.6 Advertising and displays during Competitions

3.6.1 The IPC determines the advertising requirements at IPC Games.

3.6.2 The World Para Athletics Uniform and Equipment Advertising Regulations (located on the World Para Athletics website) outline the advertising permitted by World Para Athletics at IPC Competitions. During all other World Para Athletics Recognised Competitions (except IPC Games), the relevant LOC, shall adopt the applicable advertising requirements.

3.7 Anti-gambling requirements

3.7.1 The IPC may adopt anti-gambling regulations, policies, codes and/or requirements from time to time, which will be binding on all participants of World Para Athletics Recognised Competitions.

4 Eligibility & Classification

4.1 Eligibility requirements – IPC Games

4.1.1 The IPC determines the eligibility requirements for IPC Games.

4.2 Eligibility requirements – IPC Competitions and World Para Athletics Sanctioned Competitions

4.2.1 To meet the eligibility requirements to participate in IPC Competitions and World Para Athletics Sanctioned Competitions an athlete must:

4.2.1.1 hold a valid IPC Athlete Licence issued in accordance with the IPC Athlete Registration and Licensing Programme (located on the World Para Athletics website.

4.2.1.2 be internationally classified and have been assigned a Sport Class (other than Not Eligible (NE)) in accordance with the World Para Athletics Classification Rules and Regulations;

4.2.1.3 be entered by their NPC (or National Federation if such responsibility has been delegated by the NPC), in either case the NPC being a member in good

standing of the IPC;

4.2.1.4 satisfy the nationality requirements of the IPC Athlete Nationality Policy (located on the IPC website);

4.2.1.5 be 14 years of age (or older) on 31 December of the year during which the IPC Competition or World Para Athletics Sanctioned Competition takes place; and

4.2.1.6 not be disqualified, suspended or otherwise sanctioned.

4.2.2 In order to meet the eligibility requirements for IPC Competitions and World Para Athletics Sanctioned Competitions a guide-runner must meet all of the above criteria except for criterion 4.2.1.2.

4.3 Eligibility requirements – World Para Athletics Approved Competitions

4.3.1 In order to compete in World Para Athletics Approved Competitions an athlete/guide-runner must meet the eligibility requirements determined by the relevant organising committee or governing body.

4.4 Qualification requirements

4.4.1 In addition to the eligibility requirements outlined above, in order to compete in World Para Athletics Recognised Competitions an athlete must also meet the qualification standards, qualification criteria and any sport entry rules applicable to the relevant World Para Athletics Recognised Competition.

4.5 Gender

4.5.1 Subject to Regulation 4.5.3, below, an athlete shall be eligible to compete in men's competition if he is:

4.5.1.1 recognised as male in law; and

4.5.1.2 eligible to compete under these Rules.

4.5.2 Subject to Regulation 4.5.3, below, an athlete shall be eligible to compete in women's competition if she is:

4.5.2.1 recognised as female in law; and

4.5.2.2 eligible to compete under these Rules.

4.5.3 World Para Athletics will deal with any cases involving transgender athletes in accordance with the IOC's transgender guidelines (as amended by the IOC from time to time) and any applicable World Para Athletics regulations.

4.5.4 The eligibility of persons recognised as third gender in law will be determined by the IPC on a case-by-case basis, in accordance with any applicable World Para Athletics regulations.

4.6 Classification

4.6.1 World Para Athletics shall determine the World Para Athletics Recognised Competitions where international Classification will be offered. At such Competitions, Classification will be conducted prior to the start of each Competition in accordance with the World Para Athletics Classification Rules and Regulations.

4.6.2 An athlete who has not been assessed and allocated a Sport Class by a World Para Athletics Classification Panel will not meet the eligibility criteria (set out in this Regulation 4) to compete in IPC Games, IPC Competitions and, unless WPA determines otherwise, World Para Athletics Sanctioned Competitions.

5 Anti-Doping

5.1 Anti-Doping requirements

5.1.1 The IPC Anti-Doping Code (located on the IPC website) applies to all IPC Games, IPC Competitions and World Para Athletics Sanctioned Competitions.

5.1.2 World Para Athletics Approved Competitions must be conducted in accordance with the anti-doping rules of the relevant governing body and the WADC International Standards.

In order for a World Record to be recognised by World Para Athletics, doping control must occur at the competition that the record is set, and, the testing must have been arranged in advance of the start of the first day of competition. It is not a requirement that an athlete that has broken a world record is selected for testing.

In the case where a record is broken at a competition that has not arranged for doping control in advance, the record shall not be recognised

6 Medical

6.1 Medical requirements

6.1.1 The IPC Medical Code (located on the IPC website) applies to all IPC Games, IPC Competitions and World Para Athletics Sanctioned Competitions.

6.1.2 The medical and safety rules of the relevant governing body apply to World Para Athletics Approved Competitions.

6.2 Medical responsibilities

6.2.1 In accordance with the IPC Medical Code, all athletes who compete in IPC Games, IPC Competitions and World Para Athletics Sanctioned Competitions are responsible for their own physical and mental health and for their own medical supervision.

6.2.2 By entering in an IPC Game, IPC Competition or an World Para Athletics

Sanctioned Competition, an athlete releases the IPC and World Para Athletics from any liability to the extent permitted by law for any loss, injury or damage that he or she may suffer in relation to, or as a result of, his or her participation in Classification, the relevant Competition.

6.2.3 Notwithstanding the above Regulations 6.2.1 and 6.2.2, NPCs shall use best efforts to ensure the physical and mental health of all athletes under their jurisdiction prior to their participation in IPC Games, IPC Competitions and World Para Athletics Sanctioned Competitions.

6.2.4 Every NPC is responsible to ensure that appropriate and continuous medical monitoring of its' athletes is undertaken. It is further recommended that NPCs organise for a periodic health evaluation of each athlete that it enters in an IPC Game, IPC Competition or World Para Athletics Sanctioned Competition and that NPCs appoint a team physician to attend all such Competitions.

6.2.5 In accordance with the Rules, the Medical Delegate will be entitled to prevent any athlete from competing where in his opinion it would be dangerous for the athlete to compete, including where the safety of other athletes, officials, spectators and/or the Competition itself is put at risk.

6.2.6 At all times, the overriding priority must be to safeguard the health and safety of athletes, officials and spectators. The outcome of the relevant Competition must never influence such decisions.

6.3 Medical withdrawal request

6.3.1 At all IPC Games, IPC Competitions and World Para Athletics Sanctioned Competitions the official World Para Athletics Medical Withdrawal Request Form (located on the World Para Athletics website) must be submitted to the World Para Athletics office in order to officially request the withdrawal of an athlete from the relevant Competition after submission of the final entry numbers or as otherwise determined in the Competition entry requirements.

6.3.2 The Medical Withdrawal Request Form must be signed by the athlete and the team physician of the athlete. In the event there is no team physician, if the team

has an agreement to use the physician of another team that physician may sign the form. Alternatively, the LOC Chief Medical Doctor may do so.

6.3.3 All sections of the Medical Withdrawal Request Form must be completed.

6.3.4 All Medical Withdrawal Request Forms must be submitted at least twenty-four (24) hours prior to the relevant event of the Competition. If this is not possible (for example due to the onset of an acute injury or illness within the twenty-four (24) hours prior to the relevant event) an explanation must be provided in the Medical Withdrawal Request Form.

6.3.5 The Medical Delegate, or such other person determined by the IPC/World Para Athletics makes a decision to the Technical Delegate who shall communicate whether a Medical Withdrawal Request is accepted. This decision is final with no opportunity to protest or appeal.

6.3.6 If circumstances permit, the Technical Delegate may direct that the athlete be removed from the start list and the start list may be re-drawn.

6.4 Medical insurance

6.4.1 NPCs are responsible to ensure suitable medical provision and medical insurance coverage for their respective delegations for World Para Athletics Recognised Competitions and (subject to Regulation 6.4.2 below) for the full duration of the relevant Competition, including travel to and from such Competitions. NPCs must provide a copy of this insurance to World Para Athletics if requested.

6.4.2 It shall be the responsibility of the LOC in each case to ensure on-site medical, emergency ambulance, first aid services and medical insurance coverage is provided at all IPC Games, IPC Competitions and World Para Athletics Sanctioned Competitions. The IPC Medical Committee shall issue and keep updated practical guidelines to assist LOCs in providing adequate medical services and taking appropriate safety measures at such Competitions.

6.5 Medical and safety services at IPC Games, IPC Competitions and World Para Athletics Sanctioned Competitions

6.5.1 The LOC shall be responsible for implementing the medical and safety services for IPC Games in accordance with the relevant host agreement.

6.5.2 LOCs shall be responsible for implementing the medical and safety services at IPC Competitions and World Para Athletics Sanctioned Competitions in accordance with the Scope of Event Medical Services for IPC Athletes (that forms part of the host agreement between the IPC and the LOC).

6.5.3 A Competition Medical Director shall be appointed by the LOC for each IPC Competition and World Para Athletics Sanctioned Competition to prepare and co-ordinate the medical services and safety requirements during the relevant Competition. The IPC Medical and Scientific Director shall be the liaison person between World Para Athletics and the Competition Medical Director for all medical and safety-related matters. The IPC Medical and Scientific Director may delegate specific responsibilities to such person or persons at his discretion.

6.5.4 At all IPC Competitions and any other Competitions determined by World Para Athletics, World Para Athletics shall be responsible to ensure a medical representative to monitor implementation of these and any other competition specific medical and safety rules.

6.6 Harassment

The dignity of every individual must be respected. All forms of abuse and/or harassment are prohibited. The IPC Code of Ethics and the Policy on Non-accidental Violence and Abuse (located on the IPC website) apply to all World Para Athletics Recognised Competitions.

6.7 Autonomic dysreflexia

The IPC Policy on Autonomic Dysreflexia (located on the IPC website) applies to all World Para Athletics Recognised Competitions.

6.8 Hypoxic or hyperoxic chambers or tents

The use of hypoxic or hyperoxic chambers or tents is prohibited at all World Para Athletics Recognised Competitions.

6.9 Heat

The IPC Heat Policy (located on the IPC website) applies to all World Para Athletics Recognised Competitions.

6.10 Smoking Ban

Smoking is prohibited during competition at all venues of World Para Athletics Recognised Competitions.

7 Technology and Equipment

7.1 Fundamental principles

7.1.1 The IPC Policy on Sport Equipment (located on the IPC website) applies to all World Para Athletics Recognised Competitions. The principles outlined in this policy apply in particular (but not exclusively) in relation to the development of sports specific prosthetic devices.

7.2 Monitoring of the use of technology and equipment

7.2.1 World Para Athletics will monitor the use of technology and equipment used, or, intended to be used, at World Para Athletics Recognised Competitions to ensure that it conforms to the principles outlined in the IPC Policy on Sport Equipment. The following examples shall be considered contrary to that policy; technology and/or equipment that, in the opinion of the World Para Athletics:

7.2.1.1 provides an unrealistic enhancement of height of release in throwing events;

7.2.1.2 provides an unrealistic enhancement of stride length;

7.2.1.3 is not commercially available to all athletes, unless the athlete can establish that the:

7.2.1.3.1 technology and/or equipment is in final product form;

7.2.1.3.2 manufacturer has announced the market launch date of the technology and/or equipment and this date is within 9 months of the date of the athlete's request to use it; and

7.2.1.3.3 manufacturer has published information on the technology and/or equipment; and/or

7.2.1.4 contains materials or devices that store, generate or deliver energy designed to provide an athlete with an overall competitive advantage over an athlete not using such technology and/or equipment (unless, in relation to technology and equipment not yet commercially available or commercially available from February 2020, the athlete can establish on the balance of probabilities that the use of such technology and/or equipment would not provide him with an overall competitive advantage over an athlete not using such technology and/or equipment).

7.2.2 World Para Athletics has adopted provisions to enable the use of certain technology and equipment designed to provide assistance to Para athletes. Such provisions are outlined in the Competition Rules.

7.3 Prohibited technology

7.3.1 Use of the following technology is prohibited at World Para Athletics Recognised Competitions:

7.3.1.1 equipment that breaches the fundamental principles outlined in the IPC Policy on Sport Equipment;

7.3.1.2 equipment that results in athletic performance being generated by machines, engines, electronics, motors, robotic mechanisms or the like; and

7.3.1.3 osteo-integrated prosthesis.

7.3.2 At any IPC Games, IPC Competition or World Para Athletics Sanctioned Competition the World Para Athletics Technical Delegate shall be entitled to prohibit the use of any equipment prohibited by these Regulations. In every case

of a suspected breach the World Para Athletics Technical Delegate must report the matter to World Para Athletics. Upon receiving such a report World Para Athletics must refer the matter to the IPC Medical and Scientific Director. Any further investigation and/or action will be determined by the IPC on a case by case basis.

7.3.3 World Para Athletics shall be entitled to prohibit the use of equipment either permanently or on a temporary basis (to allow for further investigation) where it considers, acting reasonably, that any of the fundamental principles of equipment design and availability are breached.

8 Disciplinary rules

8.1 The IPC Code of Ethics and the World Para Athletics Code of Conduct

8.1.1 The IPC Code of Ethics and the World Para Athletics Code of Conduct (both located on the IPC website) shall apply to all participants of World Para Athletics Recognised Competitions.

8.1.2 Any breach of these Regulations shall be determined in accordance with the procedures outlined in the World Para Athletics Code of Conduct.

9 Protests & Appeals

9.1 Field of play

9.1.1 Protests and appeals relating to the field of play shall be determined in accordance with the Competition Rules.

9.2 Anti-doping

9.2.1 All anti-doping rule violations, including any appeals regarding such violations, shall be determined in accordance with the IPC Anti-Doping Code.

9.3 Classification

9.3.1 Protests and appeals relating to Classification shall be determined in accordance with the World Para Athletics Classification Rules and Regulations.

PART C – WORLD PARA ATHLETICS COMPETITION RULES

Interpretation – where a number appears in brackets next to the heading of any of the following Rules it shall generally refer to the corresponding World Athletics Rules. This is for guidance only and the World Athletics rules must not be used to determine any issue at an WPA Recognised Competition (see Part – B 3.1.2), except in the limited number of places where these Rules clearly specify that the World Athletics Rules shall apply.

SECTION I – INTERNATIONAL OFFICIALS

(Rule 110)

Rule 1: Appointment of Officials

1. Appointment of Officials for IPC Games and IPC Competitions:
   a) At IPC Games and IPC Competitions the following international officials should be appointed by the IPC based on recommendations from the WPA Sports Technical Committee;
   b) WPA Technical Delegate(s);
   c) WPA International Technical Officials;
   d) Medical Delegate;
   e) Doping Control Delegate;
   f) Chief Classifier;
   g) International Classifiers;
   h) International Starter
   i) International Photo Finish Judge;
   j) Jury of Appeal.

Note: International Officials should wear distinctive attire or insignia.

In IPC Games and IPC Competitions (see Part B - 3.1.2 (a) and (b)), the number of officials appointed in each category, how when and by whom they shall be appointed, shall be indicated in the respective WPA Technical Requirements.

The travelling and accommodation expenses of each individual appointed by WPA under this Rule shall be paid to the individual by the LOC of the competition according to the relevant Regulations.

2. Appointment of Officials for WPA Sanctioned and Approved Competitions (see Part B - 3.1.2 (c) and (d)):
   a) A WPA Technical Delegate(s) for International and National Competitions must be appointed by WPA.
   b) If WPA Classification is being conducted in conjunction with the respective competition, then the Chief Classifier and International Classifiers must be appointed by WPA.
   c) Such other officials as the STC and the TD shall (in consultation with the LOC) decide is necessary.

Rule 2: Description of Officials and Their Duties

2.1 Technical Delegate

(Rule 112)

The Technical Delegate(s), in conjunction with the LOC, which shall afford them all necessary help, are responsible for ensuring that all technical arrangements are in conformity with these Rules and the World Athletics Track and Field Facilities Manual.

Technical Delegate(s) appointed for competitions other than one day meetings shall ensure:

a) That the submission of the final timetable of events is concluded and published together with any entry standards for the competition;

b) For Field events, to approve the list of implements to be used and whether athletes may use their own implements or those provided by a supplier;

c) For Field Events, to determine the qualifying standards, and for Track Events the basis on which the rounds shall be arranged;

d) That the applicable Technical Regulations are issued to all competing delegations in good time before the competition;

e) All other technical preparations necessary for the holding of the athletics events;

f) To reject entries for technical reasons;

g) The seeding and draws for all events are made in accordance with the Rules and any applicable Technical Regulations and approve all start lists;

h) Decide upon any matters which arise prior to the competition and for which provision has not been made in these Rules (or any applicable regulations) or the arrangements for the competitions, where appropriate in consultation with the LOC and/or conjunction with WPA at IPC Games and IPC Competitions (see Part B - 3.1.2 (a) and (b)).

i) Decide (including where appropriate in conjunction when available with the relevant Referee(s) and the Competition Director) upon any matters which arise during the competition and for which provision has not been made in these Rules (or any applicable regulations) or the arrangements for the competitions or which might require a deviation from them in order for the competition to continue in whole or in part or in order to ensure fairness to those taking part.

j) That if requested, to chair the Technical Meeting and brief the Technical Officials

k) The submission of written reports in advance of the competition on its preparation and after its conclusion on the execution, including recommendations for future editions. Technical Delegates appointed for one day meetings shall provide all necessary support and advice to the LOC and ensure the submission of written reports on the execution of the competition.

2.2 Medical Delegate

(Rule 113)

The Medical Delegate shall:

a) Have ultimate authority on all medical matters.

b) Ensure that adequate facilities for medical examination, treatment and emergency care will be available at the venue(s) of the competition, training and Warm-up Areas and that medical attention can be provided where athletes are accommodated and for provision of and compliance with the requirements of Rule 7.1.

c) Review medical certificates in accordance with Rule 5.4 and Regulation 6.3.

d) Have the power to order an athlete to withdraw before, or to immediately retire from an event during, competition.

Note (i): The powers under (c) and (d) above may be passed by the Medical Delegate to (or where no Medical Delegate is appointed or available be exercised by) one or more medical doctors appointed and so designated by the LOC who should normally be identified by an armband, vest or similar distinctive apparel. Where the Medical Delegate or doctor is not immediately available to the athlete, he may provide instruction or direction to an official or other authorised person to act on his behalf.

Note (ii): Prior to withdrawing an athlete before the commencement of an event under Rule 2.2(d), that athlete must be examined by one of the medical doctors appointed by the LOC. Any athlete withdrawn during an event under Rule 2.2(d) must, as soon as practically possible after the withdrawal, be examined by one of the medical doctors appointed by the LOC.

Note (iii): Any athlete withdrawn or retired from a running event under Rule 2.2(d) shall be shown in the result as DNS and DNF respectively. Any athlete not complying with such an order shall be disqualified from that event.

Note (iv): Any athlete withdrawn or retired from a Field Event under Rule 2.2(d) shall be shown in the result as DNS if he has not taken any trial. However, if he has taken any trials, the results of those trials shall stand and the athlete classified in the result accordingly. Any athlete not complying with such an order shall be disqualified from further participation in that event.

COMMENT: The health and safety of all participants in the competition is a high priority consideration for WPA, other governing bodies and by the LOC of the competition. The availability of the expertise of a well-respected and qualified person in the role of Medical Delegate is essential to carry out these key tasks, especially as he (or those authorised by him or the LOC amongst other duties has the responsibility to withdraw an athlete from competition if deemed necessary for medical reasons. It is important to note that the power of the Medical Delegate (or a medical doctor acting at his request or in his place) applies to all events. It is essential that there is a reliable communication system and procedures in place between the Medical Delegate (and those authorised to act in his place), the Technical Delegates and the Competition Director particularly in relation to the duties under (c) and (d) above as these have a direct impact on start lists, results and the management of the competition.

2.3 Doping Control Delegate

(Rule 114)

The Doping Control Delegate shall liaise with the LOC to ensure that suitable facilities are provided for the conduct of doping control. He shall be responsible for all matters relating to doping control.

2.4 International Technical Officials (ITOs)

(Rule 115)

Where ITOs are appointed, the Technical Delegate shall appoint the Chief ITO among the appointed ITOs, if one was not appointed previously. Whenever possible, the Chief ITO, in conjunction with the Technical Delegates, shall assign at least one ITO for every event on the programme. The ITO shall be the Referee of each event to which he is assigned.

COMMENT: From January 2016, the role of the International Technical Official (ITO) has changed significantly but this is a logical part of the evolution of the position. From this time the ITOs act as the Referee of the events to which they are appointed. Amongst the locally appointed Officials, the Chief Judge will now be the "senior" and lead role and if in the past there was some organisational or training aspect of the team that was undertaken by a locally appointed referee, these tasks will become the duty of the respective Chief Judges.

It has been noticed that the ITOs are very helpful to the Technical Delegate(s) and the LOC. They must have a great knowledge of rules, officiate within their National Governing Bodies as Referee at major competitions in their country, and be responsible for developing or delivering officiating courses in their countries. They must also know the duties of the Meeting Manager and, in principle, they should be familiar with such duties and finally, it is necessary that they speak English.

WPA has developed an education pathway for Technical Officials similar to the TOECS of the World Athletics. The pathway includes an online introductory training program, national technical officiating training and international technical officiating training. Those who pass the International Technical Officials course (which includes a requirement for spoken and written English) are eligible for the International Technical Officials panel which is established every four years. The first official panel selection was conducted in November 2017. It is also

extremely important that ITOs understand well the duties of the Referees; as with the changes in 2016 ITOs act as the relevant Referee for events that they are assigned.

2.5 International Road Course Measurer

(Rule 117)

An International Road Course Measurer may be appointed to verify the courses where road events are held entirely or partially outside the stadium.

The appointed course measurer shall be a member of the World Athletics /AIMS Panel of International Road Course Measurers (Grade "A" or "B").

The course should be measured in good time before the competition.

The measurer will check and certify the course if he finds it conforms to the Rules for Road Race (See Rule 49.2 and Rule 49.3 and respective notes).

He shall cooperate with the LOC in the course arrangements and witness the conduct of the race to ensure that the course run by athletes follows the same course that was measured and approved.

He shall furnish an appropriate certificate to the Technical Delegate(s).

COMMENT: It is important to note that WPA does not certify course measurers but uses those certified by World Athletics /AIMS for any of their events which run independently of World Athletics road races.

2.6 International Starter and International Photo Finish Judge

(Rule 118)

At all IPC Games and IPC Competitions (see Part B - 3.1.2 (a) and (b)) an International Starter and an International Photo Finish Judge shall be appointed by WPA. The International Starter shall start the races and undertake any other duties assigned to him by the Technical Delegate(s). The International Photo Finish Judge shall supervise all Photo Finish functions and shall be the Chief Photo Finish Judge.

COMMENT: It is noted that whilst the International Photo Finish Judge acts as the Chief Photo

Finish Judge at those competitions to which he is appointed and the ITOs act as Referees, there remains a clear division in responsibilities between the International Starter (IS) and the other members of the start team. Whilst the IS takes on all the powers and duties of the Starter when starting any race to which he is allocated, he does not either then or at any other time replace or have the power to override the Start Referee.

2.7 Jury of Appeal

(Rule 119)

At all IPC Games and IPC Competitions (see Part B - 3.1.2 (a) and (b)) a Jury of Appeal shall be appointed. The Jury should normally consist of three, five or seven persons. One of its members shall be the Chairman and another Secretary. If and when considered as appropriate, the Secretary may be a person not included in the Jury.

Members of the Jury of Appeal shall not be present during any deliberations of the Jury concerning any Appeal that affects, directly or indirectly, an athlete affiliated to his own national governing body.

The chair of the Jury shall ask any member implicated by this rule to withdraw, in the event the Jury member has not already done so.

WPA or other organisation responsible for the competition shall appoint one or more alternative Jury members to substitute for any Jury member(s) who are not able to participate in an Appeal.

Furthermore, a Jury of Appeal should likewise be appointed at other competitions where the LOC deem it desirable or necessary in the interest of the proper conduct of the competitions.

The primary functions of the Jury of Appeal shall be to deal with all protest appeals, and any matters arising during the course of the competition that are referred to it for decision.

COMMENT: It is particularly important to note that in certain circumstances now, where new conclusive evidence is available, that both the Referee (in the case of a protest) and the Jury (in the case of an appeal) can reconsider the decision if it was made in error – it is still applicable and practical to do so. Normally all of this is done prior to the Victory Ceremony for the event in question.

2.8 Officials of the Competition

(Rule 120)

The LOC of a competition and/or the relevant governing body shall appoint all other officials, subject to these Rules.

The following list comprises the officials considered necessary and or desirable for major International Competitions. The LOC may, however, vary this according to local circumstances.

MANAGEMENT OFFICIALS

- One Competition Director
- One Meeting Manager and an adequate number of assistants
- One Technical Manager
- One Event Presentation Manager

COMPETITION OFFICIALS

- One (or more) Referee(s) for the Call Room
- One (or more) Referee(s) for Track Events
- One (or more) Referee(s) for Field Events
- One (or more) Referee(s) for events outside the Stadium
- One (or more) Video Referee (s)
- One Chief Judge and an adequate number of Judges for Track Events
- One Chief Judge and an adequate number of Judges for each Field Event
- One Chief Umpire and an adequate number of Umpires
- One Chief Timekeeper and an adequate number of Timekeepers
- One Chief Photo Finish Judge and an adequate number of assistants
- One Chief Transponder Timing Judge and an adequate number of assistants
- One Start co-ordinator and an adequate number of Starters and Recallers

- One (or more) Starter's Assistant(s)
- One Chief and an adequate number of Lap Scorers
- One Competition Secretary and an adequate number of assistants
- One Technical Information Centre (TIC) Manager and an adequate number of assistants
- One Chief and an adequate number of Marshals
- One (or more) Wind Gauge Operator(s)
- One Chief Measurement Judge (Scientific) and an adequate number of assistants
- One Chief and an adequate number of Call Room Judges

ADDITIONAL OFFICIALS

- One (or more) Announcer(s)
- One (or more) Statistician(s)
- One Advertising Commissioner
- One Official Surveyor
- One (or more) Doctor(s)
- Stewards for Athletes, Officials and Press

Referees and Chief Judges should wear a distinctive attire or insignia.

Care should however be taken to limit the number of officials present within the field of play to that number necessary for the smooth running of the competition.

Where women's events are held, a female doctor shall be appointed when possible.

COMMENT: The number of officials appointed to a competition should be adequate to ensure the required duties are carried out both correctly and efficiently and also to ensure sufficient rest if the competition is over a long period of time on a single day or on several consecutive days. But care must also be taken not to appoint too many so that the competition area becomes cluttered or obstructed by unnecessary personnel. In more and more competitions, some tasks undertaken by on-field officials are being "replaced" by technology and unless a back-up is logically required, this needs to be taken into account when officials are appointed.

A Note on Safety

Referees and competition officials at athletics events have many important functions, but none is more important than their roles in ensuring the safety of all concerned. The athletics arena can be a dangerous place. Heavy and sharp implements are thrown and pose a hazard to anyone in their path. Athletes running on the track or on runways at high speeds can hurt themselves and anyone with whom they collide. Those competing in jumping events, often land in an unexpected or unintended manner. Weather and other conditions can make athletic competition unsafe either temporarily or for longer periods. There have been instances of athletes, officials, photographers and others who have been injured (sometimes fatally) in accidents in or near competition and training areas. Many of those injuries could have been prevented.

Officials must always be mindful of the dangers that are inherent in the sport. They must be alert at all times and must not allow themselves to be distracted. Regardless of their official position, all officials have the responsibility to do what they can to make the athletics arena a safer place. All officials should think about safety whenever and wherever they are in the competition area, and should intervene when necessary to prevent an accident, when they see conditions or a situation that could lead to one. Ensuring safety is of the utmost importance – even more so than strict compliance with the rules of competition. In the rare event when there is a conflict, the concern for safety must prevail.

2.9 Competition Director

(Rule 121)

The Competition Director shall plan and implement the technical organisation of a competition in cooperation with the Technical Delegate(s).

He shall direct the interaction between the participants in the competition and, through the communication system, shall be in contact with all the officials.

2.10 Meeting Manager

(Rule 122)

The Meeting Manager shall be responsible for the correct conduct of the Competition. He shall check that all officials have reported for duty, appoint substitutes when necessary and have authority to remove from duty any official who is not abiding by the Rules. In cooperation with the appointed Marshal, he shall arrange that only authorised persons are allowed in field of play areas.

Note: For competitions of longer than four hours or over more than one day, it is recommended that the Meeting Manager has an adequate number of Assistant Meeting Managers.

COMMENT: While WPA Rules are sometimes rather simple in wording they, in reality, hide very heavy responsibilities such as when we consider the duties of the competition director or Meeting Manager at any competition, but particularly those the size of the Paralympic Games, the World or Regional Championships.

The Meeting Manager(s) must be responsible, under the authority of the Competition director, and in accordance with the Technical Delegates' guidance and decisions, for everything happening in the field of play. In the stadium, he must place himself so as to be able to see everything that is happening and to give necessary orders. He must have in his possession the complete list of all appointed officials and be able to communicate efficiently with the other Managers, Referees and Chief Judges.

In competitions that take place over multiple days in particular it is possible that some judges may not be able to officiate during the whole competition. The Meeting Manager shall have at his disposal a reserve of officials from which he can draw any replacement, if necessary. Even if all the officials for an event are present, the Meeting Manager should ensure that the officials fulfil their duties correctly and if they do not be ready to replace them. He shall ensure that the Judges (and those assisting them) leave the arena as soon as their event is finished or when their subsequent work is done.

The Competition Director, Meeting Manager and Technical Delegate(s) all work together to ensure the best possible conditions for athletes to perform and for spectators to observe and celebrate the performances.

2.11 Technical Manager

(Rule 123)

The Technical Manager shall be responsible for:

a) Ensuring that the track, runways, circles, arcs, sectors, landing areas for Field Events and all equipment and implements are in accordance with the Rules.
b) The placement and removal of equipment and implements according to the technical organisational plan for the competition as approved by the Technical Delegates.
c) Ensuring the technical presentation of the competition areas is in accordance with such plan.
d) Checking and marking any personal implements permitted for the competition according to Rule 30.3.
e) Ensuring that he has received or is aware of the existence of, the necessary certification under Rule 10.1 before the competition.

COMMENT: The Technical Manager acts under the authority of the Competition Director or the Meeting Manager but of course an experienced Technical Manager will undertake much of his role without any direction or supervision. He must be contactable at any time. If a Referee or a Field Event Chief Judge notices that the site where an event is taking place (or will take place) needs to be modified or improved, he must refer it to the Meeting Manager who will ask the Technical Manager to take the necessary action. Also, when a Referee feels that there is a need for a change of place of a competition (Rule 24.20) he will act the same way towards the Meeting Manager who will instruct the Technical Manager to carry out, or have carried out, the wishes of the Referee. It must be remembered that neither the wind strength nor its change of direction is sufficient condition to change the place of the competition. Once the Competition director, or for international competitions the technical delegates, has approved the implements list to be used during the events, the Technical Manager shall prepare, order and receive the various implements. For the latter, he or his team must then carefully check their weight and dimensions, and any personal implements that are permitted and submitted, in order to comply with the Rules. He must also ensure that 51.20 (d) is followed in both a correct and efficient manner if a Record is set.

In relation to throwing implements, the Technical Manager(s) should apply the range of implements for competition specified in these tables when accepting new equipment from

suppliers but should not reject implements submitted for or used in competition because they do not comply with this range. It is the minimum weight that is critical in this regard.

2.12 Event Presentation Manager

(Rule 124)

The Event Presentation Manager shall plan and implement, in conjunction with the Competition Director, the event presentation arrangements for the competition. He shall also direct the interaction between the members of the event presentation team, using the communication system to be in contact with each of them.

He shall ensure that, through announcements and the available technology, the public is informed of information concerning the athletes taking part in each event, including the start lists, Classification, intermediate and final results. The official result (placings, times, heights, distances and points) of each event should be conveyed at the earliest practicable moment after receipt of the information.

COMMENT: The Event Presentation Manager not only has the responsibility of planning, leading and coordinating a production in presentation terms of all the activities that take place on the infield but also integrating them into the show to be presented to the spectators within the venue. The final aim of his work is to create an informative, entertaining, lively and attractive production of the show that is to be offered to the spectators. To succeed in this, it is important to have a team and the necessary equipment to carry out the work. The Event Presentation Manager is the person in charge of coordinating the activities of the event presentation staff working on and off the field who are related to this role including but not limited to the Announcers, Scoreboard and videoboard Operators, Audio and video Technicians and victory Ceremony officials. For almost every competition, an announcer is essential. He must be placed so as to be able to follow the meeting properly and preferably near to or otherwise in immediate communication with the Competition Director or if appointed, the Event Presentation Manager.

It is also critical that the Event Presentation Manager is aware of the events which require more quiet (such as T11/T12 Long Jump or Triple Jump events) so as to ensure the announcers and music/sound system respects the requirement for a quieter presentation of these events.

2.13 Referees

(Rule 125)

1. One (or more) Referee(s) shall be appointed respectively for the Call Room, for Track Events, for Field Events, and for Road Race Events outside the stadium. When appropriate, one (or more) Video Referee(s) shall be appointed.
   The Video Referee(s) shall operate from a Video Review Room, should consult and shall be in communication with the other Referees.

COMMENT: At meetings where sufficient officials are available so that more than one Referee is appointed for the races, it is strongly recommended that one of them is appointed as the Start Referee. This Start Referee should be a specialist and experienced starter, thus basing his observations on a technically sound background. To be clear the Start Referee in such circumstances should exercise all the powers of the Referee in relation to the start and is not required to report to or act through any other track Referee when doing so.

However, if only one Referee is appointed to oversee the races of a certain competition, and considering the powers he has, it is strongly recommended that the Referee be positioned in the start area, during each start (at least for those events using a crouch start) to witness any eventual problem that may occur and to take any decision needed to solve it. This will be easier when a World Athletics certified Start Information System is in use.

If not, and if the Referee will not have time to place himself in line with the finish line after the start procedure (as in 100m and 200m) and foreseeing the possible need for the Referee to decide placings, a good solution may be to have the Start Coordinator (who should have an extensive experience as a starter) being appointed to also act as Start Referee.

2. Referees shall ensure that these Rules (and applicable Technical Regulations) are observed and shall decide upon any matters which arise during the competition (including in the Warm-up Area, Call Room and, after the competition, up to and including the Victory Ceremony) and for which provision has not been made in these Rules (or any applicable Technical Regulations), where appropriate or necessary in conjunction with the Technical Delegate(s).
   The respective Referees for Track Events and for events outside the stadium shall have jurisdiction to decide placings in a race where the Judges of a disputed place(s) are unable to arrive at a decision.

The Start Referee (or if one is not appointed, the relevant Track Referee) has the power to decide on any facts related to the starts if he does not agree with the decisions made by the start team, except in cases when it regards an apparent false start indicated by a World Athletics approved Start Information System, unless for any reason the Referee determines that the information provided by the system is obviously inaccurate.

A Track Referee appointed to oversee the starts is designated the Start Referee.

The Referee shall not act as a Judge or Umpire but may take any action or decision according to the Rules based on his own observations and may overrule a decision of a Judge.

Note: For the purpose of this Rule and applicable Regulations, including the Advertising Regulations, the Victory Ceremony is concluded when all directly related activities (including photographs, victory laps, crowd interaction etc.) are completed.

COMMENT: It should be carefully noted that it is not necessary for a Referee to have received a report from a Judge or Umpire in order to make a disqualification. He may act at all times by his own direct observation. The above Note should be interpreted to include all matters which are incidental to or relate to the victory Ceremony and that the Referee for that event is responsible for them. When Victory Ceremonies are held at a different location or in a different session, common sense should be applied and if necessary, another Referee may have to be substituted if it is not practical for the original Referee to manage the situation.

3. The appropriate Referee shall check all final results, shall deal with any disputed points and, in conjunction with the Measurement Judge (Scientific) where appointed, shall supervise the measurements of Record performances. At the conclusion of each event, the result card shall be completed immediately, signed by the appropriate Referee and handed to the Competition Secretary.

COMMENT: For Track Events once the Track Referee and Video Referee “clear” the event, the results are released by the Chief Photo Finish Judge and there is no need to physically sign the results sheet.

4. The appropriate Referee shall rule on any protest or objection regarding the conduct of the competition (including in the Warm-up Area, Call Room and, after the competition, up to and including the Victory Ceremony).

COMMENT: In major competitions such as Paralympic Games, World and Regional

Championships an ITO is assigned to observe the Victory Ceremony and report on any infractions as well as to issue yellow or red cards to athletes who act in an unsporting manner.

5. A Referee shall have authority to warn or exclude from competition, any athlete or relay team guilty of acting in an unsporting or improper manner or under Rules 6, 7, 17.5, 18.17, 18.18, 24.2, 24.5, 24.19 or 49.8(h)). In case of a disciplinary matter, the Call Room Referee has authority starting from the Warm-up Area up to the competition area. In all other instances, the Referee applicable to the event in which the athlete is or was competing, shall have authority.

   The applicable Referee (where practicable after consulting the Competition Director) may warn or remove any other person from the competition area (or other area related to the competition including the Warm-up Area, Call Room and coaches seating) who is acting in an unsporting or improper manner or who is providing assistance to athletes that is not permitted by the Rules. Warnings may be indicated to the athlete by showing a yellow card, exclusion by showing a red card. Warnings and exclusions shall be entered on the result card. Those warnings and exclusions decided by a Referee shall be communicated to the Competition Secretary and to the other Referees.

   Note (i): The Referee may, where the circumstances justify it; exclude an athlete or relay team without a warning having been given (See also Note to Rule 7.2);

   Note (ii): When excluding an athlete or relay team from competition under this Rule, if the Referee is aware that a yellow card has already been given, should show a second yellow card followed immediately by a red card.

   Note (iii): If a yellow card is given and the Referee is not aware that there is a previous yellow card, it shall, once this is known, have the same consequence as if it was given in association with a red card. The relevant Referee shall take immediate action to advise the athlete or relay team or his/its team of his/its exclusion.

COMMENT: Six key points are made to provide guidance and clarity in relation to the way in which cards are shown and recorded:

(1) Yellow and red cards can be given either for disciplinary reasons (refer mostly to Rule 2.13.5 and Rule 8.2) or for technical infringements in case they are serious enough to be considered unsporting manners (e.g. a serious and clear deliberate obstruction in a race).

(2) Whilst it is normal and usually expected that a yellow card would have been given before a red card, it is envisaged that in the cases of particularly bad unsporting or improper behaviour a

red card can be given immediately. It should be noted that the athlete has in any case the opportunity to appeal such a decision to the Jury of Appeal.

(3) There will be also some cases in which it is not practical or even logical for a yellow card to have been issued. For example, the note to Rule 7.2 specifically allows for an immediate red card if justified in cases covered by Rule 7.3 (a) such as pacing in races.

(4) A similar situation might also follow when a Referee issues a yellow card and the athlete responds in such an inappropriate manner that it is justified to then immediately give a red card. It is not essential for there to be two completely different and distinct in time instances of inappropriate behaviour.

(5) As per Note (iii), in cases where a Referee is aware that the athlete in question has already received a yellow card during the competition and he proposes to issue a red card, the Referee should first show a second yellow card and then the red card. However, if a Referee does not show the second yellow card, it will not invalidate the issuing of the red card.

6. The Referee may reconsider a decision (whether made in the first instance or in considering a protest) on the basis of any available evidence, provided the new decision is still applicable. Normally, such re-consideration may be undertaken only prior to the Victory Ceremony for the relevant event or any applicable decision by the Jury of Appeal.

COMMENT: This Rule clarifies that as with the Jury of Appeal (see Rule 50.9) a Referee can reconsider a decision and may do so equally whether this was a decision by himself in the first instance or one made when considering a protest made to him. This option can be considered especially when new evidence of information comes to hand quickly as it could avoid the need for a more complicated or involved appeal to the Jury of Appeal. But note the practical time limitations on such a reconsideration.

7. If, in the opinion of the appropriate Referee, circumstances arise at any competition such that justice demands that any event or any part of an event should be contested again, he shall have authority to declare the event or any part of an event void and that it shall be held again, either on the same day or on some future occasion, as he shall decide.

COMMENT: It should be carefully noted by Referees and Juries of Appeal that, except in very special circumstances, an athlete who does not finish a race, should not be advanced to a later round or included in a re-run of an event.

8. The Road Race Referee shall, wherever practicable give a warning prior to disqualification.

2.14 Judges

(Rule 126)

General

1. The Chief Judge for Track Events and the Chief Judge for each Field Event shall co-ordinate the work of the judges in their respective events. If the duties of the Judges have not been allocated in advance, they shall allocate the duties.
2. The judges may reconsider any original decision made by them if it was made in error, provided the new decision is still applicable. Alternatively, or if a decision has subsequently been made by a Referee or the Jury of Appeal, they shall refer all available information to the Referee or to the Jury of Appeal.

Track Events and Road Events

3. The track and road Judges should all operate from the same side of the track or course, and they shall decide the order in which the athletes have finished and, in any case where they cannot arrive at a decision, shall refer the matter to the Referee, who shall decide.
   Note: The Judges should be placed at least 5m from, and in line with, the finish and should be provided with an elevated platform.

Field Events

4. The field event Judges shall judge and record each trial and measure each valid trial of athletes in all Field Events. In the High Jump precise measurements should be made when the bar is raised particularly if Records are being attempted. At least two Judges should keep a record of all trials, checking their recordings at the end of each round of trials.
   The appropriate Judge shall normally indicate the validity or non-validity of a trial by raising a white or red flag, as appropriate. Alternative visual indication may also be approved by WPA.

COMMENT: Unless a Judge is sure that an infringement of the Rules has occurred he will normally give the benefit of any doubt to the athlete, determine that the trial is valid and raise a

white flag. However, when a video Referee is appointed and with access to footage for the Field Events, there is an option in the case of some doubt for the Judge in conjunction with the on-field Referee to delay the raising of either flag until he has sought the advice of the video Referee - always ensuring either that the landing mark is preserved or the trial is measured in case it is valid. Alternatively, the Judge if in real doubt could raise the red flag, ensure the mark is preserved or that the trial is measured and then seek advice from the video Referee.

It is recommended that for each Field Event only one set of white and red flags are used in order to reduce the possibility of any confusion about the validity of trials. It is considered that it is never necessary to use more than one set of flags in a Jumping Event. Where a specific scoreboard is not available to indicate the wind reading in Horizontal Jumps, some form of indication other than a red flag should be used to indicate an excessive reading.

In the case of Throwing Events, with respect to:

Indications by other circle judges to the judge with the flags that a failure has been made, it is recommended that an alternate form of indication to flags is used such as a small red card held in that judge's hand, or some form of hand signals;

The landing of an implement on or outside the sector line, it is recommended that an alternate form of indication to a flag is used - such as a judge's outstretched arm parallel to the ground;

A judgment in the javelin throw that the metal head has not touched the ground before any other part of the javelin; it is recommended that an alternate form of indication to a flag is used - such as the pushing of the open hand of the judge towards the ground.

2.15 Umpires (Running and Wheelchair Racing Events)

(Rule 127)

1. Umpires are assistants to the Referee, without authority to make final decisions.
2. The Umpires shall be placed by the Referee in such a position that they may observe the competition closely and, in the case of a failure or violation of the Rules by an athlete or other person, make an immediate written report of the incident to the Referee.
3. Any such breach of the Rules should be communicated to the relevant Referee by the raising of a yellow flag or any other reliable means approved by the Technical Delegate(s).
4. A sufficient number of Umpires shall also be appointed to supervise the take-over zones in

relay races.

Note (i): When an Umpire observes that an athlete has run in a different lane from his own, or that a relay take-over has taken place outside the take-over zone, he should immediately mark on the track with suitable material the place where the infringement took place or make a similar notation on paper or by electronic means.

Note (ii): The Umpire(s) shall report to the Referee any breach of the Rules, even if the athlete (or team, for relay races) does not finish the race.

COMMENT: The Chief Umpire (see Rule 2.8) is the assistant of the Track Referee and indicates the placement of and co-ordinates the work and reports of each Umpire. It is up to the Meeting Manager in consultation with the Track Referee to select the appropriate number of Umpires according to the level of the meeting, the number of entries and the number of available officials.

Indication of an infringement

When the events take place on a synthetic track, it has been the practice to provide the Umpires with adhesive tape so that they can mark the track where an infringement has taken place – although the Rules (see note (i) above) now acknowledge that this may be and is often done in other ways.

Note that the failure to report an infringement in a particular way (or at all) does not prevent a valid disqualification being made. It is important that Umpires "report" all instances where they believe the Rules have been infringed, even when the athlete or team does not finish the race.

2.16 Timekeepers and Photo Finish and Transponder Timing Judges

(Rule 128)

1. In the case of hand timing, a sufficient number of timekeepers for the number of athletes entered shall be appointed. One of them shall be designated the Chief Timekeeper. He shall allocate duties to the Timekeepers. These Timekeepers shall act as back-up Timekeepers when Fully Automatic Photo Finish System or Transponder Timing System are in use.
2. Timekeeper, Photo Finish and Transponder Timing Judges shall act in accordance with Rule 20.
3. When Fully Automatic Timing and Photo Finish System is used, a Chief Photo Finish Judge

and an adequate number of assistants shall be appointed.

4. When a Transponder Timing System is used, a Chief transponder Timing Judge and an adequate number of assistants shall be appointed.

2.17 Start Co-ordinator, Starter and Recallers

(Rule 129)

1. The Start Co-ordinator shall:
   a) Allocate the duties of the start team However, in the case of IPC Games and IPC Competitions (see Part B - 3.1.2 (a) and (b)), the determination of which events will be assigned to the International Starter will be the responsibility of the Technical Delegates;
   b) Supervise the duties to be fulfilled by each member of the team;
   c) Inform the Starter, after receiving the relevant order from the Competition Director, that everything is in order to initiate the start procedure (e.g., that the Timekeepers, the Judges and, when applicable, the Chief Photo Finish Judge, Chief Transponder Timing Judge and the Wind Gauge Operator are ready);
   d) Act as an interlocutor between the technical staff of the timing equipment company and the Judges;
   e) Keep all papers produced during the start procedure including all documents showing the reaction times and/or false start waveform images if available;

COMMENT: All members of the start team must be well informed about the Rules and how they should be interpreted. The team must also be clear on what procedures it will follow when implementing the Rules, so that the events can continue without delay. They must understand well the respective duties and roles of each member of the team, especially the Starter and the Start Referee.

2. The Starter, whose primary responsibility is to ensure a fair and equitable start for all competitors, shall have entire control of the athletes on their marks. When a Start Information System is used, the Starter and/or an assigned Recaller shall wear headphones in order to hear clearly any acoustic signal emitted when the System indicates a possible false start.
3. The Starter shall position himself so that he has full visual control over all athletes during the start procedure.

It is recommended, especially for staggered starts, that loudspeakers in the individual lanes be used for relaying the commands of the start and any recall signals to all athletes at the same time.

Note: The Starter shall place himself so that the whole field of athletes falls into a narrow visual angle. For races using crouch starts it is necessary that he is placed so that he can ascertain that all athletes are currently steady in their set positions before the gun is fired or approved starting apparatus is activated. (All such starting apparatus is termed "gun" for the purpose of these Rules.) Where loudspeakers are not used in races with a staggered start, the Starter shall place himself so that the distance between him and each of the athletes is approximately the same. Where, however, the Starter cannot place himself in such a position, the gun shall be placed there and discharged by electric contact.

COMMENT: The Starter's commands have to be clear and heard by all athletes but, unless he is a long way from the athletes and without a speaker system, he should avoid shouting whilst giving the commands.

4. One or more Recallers shall be assigned to assist the Starter.
   Note: For events of 200m, 400m, 4x100m, 4x200m, 4x400m Relays, there shall be at least two Recallers.
5. Each Recaller shall place himself so that he can see each athlete assigned to him.
6. Each Recaller is obliged to recall the race if any infringement of the Rules is observed. After a recalled or aborted start the Recaller shall report his observations to the Starter who decides whether and to whom a warning or disqualification shall be issued (See also Rule 17.7 and Rule 17.10).
7. Disqualification under Rule 17.8 may be decided only by the Starter.

COMMENT: It is important that the contents of this rule be read in conjunction with Rule 2.13 (Referee) as in effect both the starter and Referee (Start Referee when appointed) are responsible for starts and who can determine whether a start is fair. On the other hand, a Recaller has no such power and whilst he may recall a start, he cannot act unilaterally thereafter and must simply report his observations to the starter about why he recalled the race.

8. To assist in races using crouch starts, a World Athletics approved Start Information System shall be used (See also Rule 16.3).

2.18 Starter's Assistants

(Rule 130)

1. The Starter's Assistants shall check that the athletes are competing in the correct heat or race and that their number bibs are worn correctly.
2. They must place each athlete in his correct lane or station, assembling the athletes approximately 3m behind the start line (in the case of races started in echelon, similarly behind each start line). When this has been completed, they shall signal to the Starter that all is ready. When a new start is ordered, the Starter's Assistants shall assemble the athletes again.
3. The Starter's Assistants shall be responsible for the readiness of batons for the first athletes in a relay race.
4. When the Starter has ordered the athletes to their marks, the Starter's Assistants must ensure that Rule 17.4 and Rule 17.5 are observed.
5. In case of a false start, the Starter's Assistants shall proceed in accordance with Rule 17.9.
6. The Starter's Assistants shall assist athletes to set their starting block in accordance with Rule 7.13.

COMMENT: The importance of the Starter's assistants cannot be underestimated. They set the mood for the competitors by ensuring that they are in the correct heat and lanes as assigned. They help to control the start of races by ensuring the athletes are ready for introductions and the instructions of the Starter. In addition, they are responsible for ensuring that batons are available for those relay races where batons are used and to collect them at the conclusion of the race.

2.19 Lap Scorers

(Rule 131)

1. Lap Scorers shall keep a record of the laps completed by all athletes in races longer than 1500m. For races of 5000m and longer, a number of Lap Scorers under the direction of the Referee shall be appointed and provided with lap scoring cards on which they shall record the times over each lap (as given to them by an official Timekeeper) of the athletes for whom they are responsible. When such a system is used, no Lap Scorer should record more than four athletes. Instead of manual lap scoring, a computerised system, which may

involve a transponder carried or worn by each athlete, may be used.

2. One Lap Scorer shall be responsible for maintaining, at the finish line, a display of the laps remaining. The display shall be changed each lap when the leader enters the finish straight. In addition, manual indication shall be given, when appropriate, to athletes who have been, or are about to be, lapped. The final lap shall be signalled to each athlete, usually by ringing a bell.

2.20 Competition Secretary, Technical Information Centre (TIC)

(Rule 132)

1. The Competition Secretary shall collect the full results of each event, details of which shall be provided by the Referee, the Chief Timekeeper, Chief Photo Finish Judge, or Chief Transponder Judge and the Wind-Gauge Operator. He shall immediately relay these details to the Announcer, record the results and convey the result card to the Competition Director. Where a computerised results system is used the computer recorder at each Field Event site shall ensure that the full results of each event are entered into the computer system. The track results shall be input under the direction of the Chief Photo Finish Judge. The Announcer and the Competition Director shall have access to the results via a computer.
2. In events in which athletes are competing with different specifications (such as implement weight), the relevant differences should be clearly indicated in the results or a separate result shown for each category.
3. The following standard abbreviations should be used in the preparation of start lists and results where applicable:

   Did not start – DNS
   Did not finish – DNF
   No valid trial recorded – NM
   Disqualified – DQ
   Valid trial in High Jump – “O”
   Failed trial in Field Events – “X”
   Passed trial in Field Events – “–”
   Retired from competition in Field Event – r
   Qualified by place in Track Events – Q

Qualified by time in Track Events – q
Qualified by standard in Field Events– Q
Qualified without standard in Field Events – q
Advanced to next round by Referee – qR
Advanced to next round by Jury of Appeal – qJ
Yellow Card – YC
Second Yellow Card – YRC
Red Card – RC

COMMENT: An athlete shall be regarded as DNS if:
(a) after their name having been included on the start list for any event they do not report to the Call Room for that event;
(b) having passed through the Call Room they do not make any attempt in a Field Event or do not attempt to make a start in a running event.

If an athlete is disqualified in an event for an infringement of any Rule, reference shall be made in the official results to the Rule which has been infringed.

If an athlete is disqualified from an event for acting in an unsporting or improper manner, reference shall be made in the official results giving reasons for such disqualification.

COMMENT: Rules 2.20.2 and Rule 2.20.3 acknowledge the not uncommon situation in many competitions below the top level (and even in some high level competitions) where athletes of different age and categories who are competing in the same competitions. This Rule confirms that this is acceptable - including as a means of meeting minimum competitor number requirements, even for the purposes of Rule 51.1 and Rule 51.2 as well as setting out how the results should be presented. Given that disqualifications can be me made for both technical and disciplinary reasons, it is very important that the reason for a disqualification is always indicated in the results. This is achieved by always stating the Rule under which the athlete was disqualified next to the symbol DQ.

4. A Technical Information Centre (TIC) will be established for WPA Recognised Competitions (see Part B - 3.1.2) and is recommended for other competitions held over more than one day. The main function of the TIC is to ensure smooth communication between each team delegation, the LOC, the Technical Delegates and the competition administration regarding technical and other matters relating to the competition.

COMMENT: An effectively managed Technical Information Centre will significantly assist in the

delivery of a high quality competition organisation. The TIC Manager should have excellent knowledge of the Rules and equally importantly of the specific Regulations for the particular competition. The hours of operation of the TIC should reflect the hours of the competition plus some periods of time before and after when there will need to be interaction between the various parties, particularly between the team delegations and the LOC. It is common, although not essential, for larger events to have "branches" of the TIC (sometimes called Sport Information desks) in the main athlete accommodation locations. If this is the case, there must be excellent communication between the SID(s) and the TIC. Because the hours of operation of the TIC and SID(s) may be long, it will be necessary for the TIC Manager to have several assistants and for them to work in shifts. Whilst some duties of the TIC are covered in the Competition Rules (see for example Rules 2.20, 50.3 and Rule 50.7), others will be set out in the Regulations for each competition and in competition documents such as team handbooks etc.

2.21 Marshal

(Rule 133)

The Marshal shall have control of the field of play and shall not allow any persons other than the officials and athletes assembled to compete or other authorised persons with valid accreditation to enter and remain therein.

COMMENT: The Marshal's role is to regulate entry to the field of play during preparations immediately beforehand and while the event is in progress. He operates generally in accordance with the plan established by the Competition Director and in relation to more immediate matters receives his orders directly from the Meeting Manager. Accordingly, he will:

manage the control for the entrances into the arena of the athletes, the officials and on-field volunteers, service staff, accredited press photographers and the TV crews. At each competition, the number of such in-field accreditations is agreed beforehand and all these persons must wear a special bib;

manage the control at the point where the athletes leave the arena (usually for larger events into the Mixed Zone and/or the Post Event Control Area) when they have finished their event;

ensure that, at all times, the sight lines to the competition sites are as clear as possible for the

spectators' benefit as well as for television. He is directly answerable to the Meeting Manager who must be able to contact him at any time if the need arises.

To assist the Marshal and his team in their work it is usual that those persons permitted to enter the arena, other than the athletes, are clearly distinguishable by means of the special bib or accreditation card or distinctive uniform.

2.22 Wind Gauge Operator

(Rule 134)

The Wind Gauge Operator shall ascertain the velocity of the wind in the running direction in events to which he is appointed and shall then record and sign the results obtained and communicate them to the Competition Secretary.

COMMENT: Whilst in practice it may be that the Wind Gauge Operator, the Technical Manager or a Photo Finish Judge actually puts the gauge in the correct place ultimately it is the responsibility of the relevant Referee to check that this is done and in accordance with the Rules (see Rules 18.13 and Rule 27.12)

It is noted that particularly for the Track Events the wind gauge can be operated remotely. In such cases it is almost always connected to the photo finish and results "system", so that a Wind Gauge Operator will not be required and his duties are filled, for example, by someone in the Photo Finish team.

2.23 Measurement Judge (Scientific)

(Rule 135)

One Chief Measurement Judge and one or more assistants shall be appointed when Electronic or Video Distance Measurement or other scientific measurement device is to be used.

Before the start of the competition, he will meet the technical staff involved and familiarise himself with the equipment. Before each event he will supervise the positioning of the measuring instruments, taking account of the technical requirements given by the manufacturer and the instrument calibrating laboratory.

To ensure that the equipment is operating correctly, he shall, before the event, supervise a set

of measurements in conjunction with the Judges and under the supervision of the Referee, to confirm agreement with results achieved using a calibrated certified steel tape. A form of conformity shall be issued and signed by all those involved in the test and attached to the results card. During the competition he shall remain in overall charge of the operation.

He will report to the Referee to certify that the equipment is accurate.

Note: Whilst it is not mandatory, it is recommended that the Measurement Judge should carry out a set of measurements during the event to verify the measurements taken before the event.

COMMENT: When electronic or video distance measuring equipment is used a Chief Judge is placed as the official in charge in a similar way as is the case with photo finish or transponder timing. In the case of video measurement, the Chief Measurement Judge will be expected to take a more active and hands-on role during the events, than would be the case with fully on-field electronic distance measurement.

In particular this should involve ensuring that an appropriate communication system is in place between the on-Field Judges and the Judges undertaking the video reading to ensure that each measurement is correctly made and that in the case of the Horizontal Jumps, the landing mark is not raked out until an image has been confirmed. Whether it is the Chief Measurement or another Judge who is responsible for ensuring the video reading is correct, he must be especially careful to ensure that the current, and not a previous, trial is the one that is measured.

2.24 Call Room Judges

(Rule 136)

The Call Room Chief Judge shall supervise the transit between the Warm-up Area and the competition area to ensure that the athletes after being checked in the Call Room, be present and ready at the competition site for the scheduled start of their event.

The Call Room Judges shall ensure that athletes are wearing the national or Club uniform clothing officially approved by their national governing body, that the bibs are worn correctly and correspond with start lists; that shoes, number and dimension of spikes, eye masks, tethers, racing chairs, Running frames, throwing frames, Maximum Allowable Standing Height (see Rule 6.12.2) and advertising on clothing and athletes' bags comply with the Rules and

Regulations; and that unauthorised material is not taken into the field of play.

The Judges shall refer any unresolved issues or matters arising to the Call Room Referee.

COMMENT: A well planned, and efficiently managed Call Room is fundamental to the success of a competition. Planning to ensure sufficient space at the point when the Call Room will be at its fullest capacity, how many Call Rooms (and sections within each) are required and a reliable communication system with the other Officials and to notify the athletes when to report from the Warm-up Area are constants. It is important that in the planning process it is determined which checks will be made and preferably these should be communicated to the athletes and teams in advance to avoid stress or confusion immediately before competition. Most important of all is that the Call Room Judges ensure the athletes are in the correct heat, race or group and that they leave for the competition area in a timely manner in accordance with the Call Room schedule. Ideally the Call Room schedule, indicating such key times as entry to and departure from the Call Room and arrival at the event site, as well as the start time of the event.

Call Room Judges play another extremely important role which relates to the inspection of the equipment being used by some athletes such as tethers, eye patches, eye masks, wheelchairs and throwing frames. They are also responsible for ensuring athletes in Sport Classes T/F61-62 do not exceed their Maximum Allowable Standing Height (see Rule 6.12.2).

For events which require guide-runners or assistants, the Call Room Judges are responsible for ensuring that both the athlete and his guide-runner or assistant are both checked; just like they would for an individual athlete.

It is important to note that in Throwing Events for Sport Classes F11-12, F31-33 and F51-54 one (1) assistant, per athlete, per event, is permitted in accordance with Rule 7.14 and Rule 7.16. The same applies for T12 athletes in Jumping Events, see Rule 7.20. However, for T11 athletes in Jumping Events, up to two (2) assistants are permitted, per athlete, per event in accordance with Rule 7.18.

It should be noted that T11 athletes must have one (1) guide-runner and may have two guide-runners for 5000m or longer races, whereas a T12 athlete may have one (1) guide-runner or two (2) guide-runners for races of 5000m or longer. If a T11 or T12 athlete intends to run with two guide-runners, in races of 5000m or longer, the intention to interchange guide-runners, as well as the specifics of which lap in track events and at which distance in road events the guide-runner exchange will occur, must be notified in advance to the Referee and Technical Delegate

in accordance with the regulations of the respective competition.

It is also important that the Call Room Judges do not allow someone onto the field of play who is not a competing athlete or who has not been correctly accredited and is entitled to be there for the specific event. This is more important for relay races than many other events which are easier to determine with the start lists.

2.25 Advertising Commissioner

(Rule 137)

The Advertising Commissioner (when appointed) will supervise and apply the current Advertising Rules and Regulations and shall determine any unresolved advertising issues or matters arising in the Call Room in conjunction with the Call Room Referee.

2.26 Chief Classifier

Where international classification is staged, a Chief Classifier shall be appointed by WPA. The Chief Classifier shall liaise with the LOC and the appointed Technical Delegate to ensure that suitable facilities and logistics are provided for the conduct of classification. He shall supervise and ensure the appointed International Classifiers deliver classification in full compliance with the WPA Classification Rules and Regulations. The Chief Classifier shall be responsible for all matters relating to classification.

COMMENT: The Chief Classifier, the Technical Delegate(s) and the Competition Director must liaise together should an athlete's Sport Class change during the Classification Evaluation Period and/or the Classification Competition Period. Re-entry may be considered and is subject to the Technical Delegate's approval (see Rule 5.3).

2.27 International Classifiers

International Classifiers shall be appointed by WPA to work in their duties as members of classification panels. They shall evaluate and observe athletes' in terms of their respective impairment pre and/or during competition and allocate sport class and class status in accordance with WPA Classification Rules and Regulations.

SECTION II – GENERAL COMPETITION RULES

Rule 3: The Athletics Facility

(Rule 140)

Any firm, uniform surface that conforms to the specifications in the World Athletics Track and Field Facilities Manual, may be used for WPA Recognised Competitions. Paralympic Games and World Championships must be held only on synthetic surfaced facilities that hold a current valid World Athletics Class 1 or Class 2 Athletics Facility Certificate.

In any case, a current national track certificate from an accredited surveyor shall be required for all facilities intended for use for Regional Championships, Regional Games, Sanctioned and Approved Competitions.

Note (i): The World Athletics Track and Field Facilities Manual, which may be downloaded from the World Athletics website, contains more detailed and defined specifications for the planning and construction of track and field facilities including further diagrams for track measurement and marking.

Note (ii): The current standard forms required to be used for the certification application and measurement report as well as the Certification System Procedures may be downloaded from the World Athletics website.

Rule 4: Age, Gender Categories and Mixed Competition

(Rule 141)

Age Categories

1. The following age groups are recognised by WPA:
   a) Master Men and Women: Any athlete who has reached his/her 35th birthday
   b) Under-20 (U20) Men and Women: Any athlete of 17, 18 or 19 years on 31 December in the year of the competition;
   c) Under-17 (U17) Men and Women: Any athlete of 14, 15 or 16 years on 31 December in the year of the competition.

Note (i): An athlete must be 14 by 31 December in the year of competition to compete in an open event.

Note (ii): Eligibility, including minimum age for participation in IPC Games and IPC Competitions (see Part B - 3.1.2 (a) and (b)) shall be subject to specific competition regulations.

2. An athlete shall be eligible to compete in an age group competition under these Rules if he is within the age range specified in the relevant age group classification. An athlete must be able to provide proof of his age through presentation of a valid passport or other form of evidence as permitted by the Regulations for the competition. An athlete who fails or refuses to provide such proof shall not be eligible to compete.

COMMENT: While this rule defines the age groups in a particular way, it is often the Technical Regulations for a specific competition which determines whether younger athletes can participate as envisaged by note (ii). If they are accepted into the competition they are required to compete with the same conditions and implements as their competitors in the age grouping.

Gender Categories

3. Competition under these rules is divided into men's, women's and universal categories. When a Mixed Competition is conducted outside the stadium or in one of the limited cases set out in Rule 4.7 and Rule 4.8, separate men's and women's categories results should still be declared or otherwise indicated. When a universal event or competition is conducted a single category result only shall be declared.
4. An athlete shall be eligible to compete in men's (or universal) competition if he is recognised as a male in accordance with Part B – 4.5 of these Rules.
5. An athlete shall be eligible to compete in women's (or universal) competition if she is recognised as a female in accordance with Part B – 4.5.
6. An athlete who fails or refuses to comply with the applicable Regulations shall not be eligible to compete.

COMMENT: Universal competition covers events in which men and women participate together without separate category of results as well as relay or team events in which both men and women are included in the same teams.

Mixed Competition

7. Universal competitions such as relays or other team events in which men and women compete together or events in which men and women compete for a single category are permitted in accordance with the applicable regulations of the relevant body.
8. Other than under Rule 4.7, for all other competitions held completely in the stadium, mixed events between male and female participants shall not normally be permitted. However, the following may be permitted in all competitions except held under Part B - 3.1.2 (a) and (b):
    a. Mixed stadium competition in races of 5000m or longer but it is permitted only when there are insufficient athletes of one or both genders competing to justify the conduct of separate races. The gender of each athlete shall be shown in the result. Such races shall not, in any case, be conducted so as to allow athletes of one gender to be paced / drafted or assisted by athletes of another gender.
    b. Field Events for men and women may be conducted simultaneously at one or more event sites. Separate result cards shall be used and results declared for each gender. Each round of trials of such events may be conducted either by calling all athletes of one gender followed by the other or by alternating them. For the purposes of Rule 24.17, all athletes shall be regarded as if they were of the same gender. Where Vertical Jumps are conducted on a single event site, Rule 25 and Rule 26 must be strictly applied including that the bar must continue to be raised in accordance with a single set of previously announced increments for the entire competition.

COMMENT: The intent of Rule 4.8 is to facilitate the conduct of Field Events and in races of 5000m or longer, when small numbers of athletes of one or both genders are entered in the case of longer events, where timetabling constraints make it difficult to program separate races. The intent of the Rule is not to provide opportunity for women to compete in races against men to achieve potentially better performance conditions.

To be clear, mixed competition in Field Events and in races of 5000m or longer is:

permitted in WPA Approved Competitions, subject only to the rules of the applicable governing body. [No additional permission from WPA is required];

permitted in WPA Sanctioned Competitions under Part B - 3.1.2 (c) if specifically permitted by

not permitted at IPC Games and IPC Competitions under Part B - 3.1.2 (a) and (b). In the case of mixed competitions in Vertical Jumps, Rule 25 must be strictly applied - including that the bar must continue to be raised in accordance with a single set of agreed increments for the entire competition.

There are also restrictions on the recognition of World Records in mixed competitions – see Rules 51.2 (with reference to track races of 5000m and longer) and Rule 51.22 (with reference to women's road races).

Rule 51.22 Note (i) provides guidance on how a women's only race can be achieved (enabling a women's only record to be set) in a situation where both men and women are or might be competing. (See also Rule 2.20.2 and Rule 2.20.3).

Rule 5: Entries

(Rule 142)

1. Competitions under the Rules are restricted to eligible athletes.

Simultaneous Entries

2. If an athlete is entered in both a Track Event and a Field Event, or in more than one Field Event taking place simultaneously, the appropriate Referee may, for one round of trials at a time, or for each trial in the High Jump, allow an athlete to take his trial in an order different from that decided upon by the draw prior to the start of the competition. However, if an athlete subsequently is not present for any trial, it shall be deemed that he is passing once the period allowed for the trial has elapsed.

   Note: In Field Events, the Referee shall not allow an athlete to take a trial in a different order in the final round of trials, but the Referee may allow an athlete to do so during any earlier round of trials.

COMMENT: The Note clarifies that allowing an athlete to take a trial in a different order in the final round of trials (irrespective of the number of rounds of trials) because of a clash with another event is not permitted. If an athlete is not present in the final round and has not previously indicated that he will pass, then the time allowed for his trial will run and if he does

not return before it expires, then he will be recorded as passing. (See also Rule 24.18 where a change of order will normally not be made when a substitute trial is awarded - in any round of trials).

Re-entry after Changes in Sport Class

3. At all IPC Games and IPC Competitions (see Part B - 3.1.2 (a) and (b)) should an athlete's Sport Class change during the Classification Evaluation Period and/or the Classification Competition Period re-entry may be considered and are subject to the approval of Technical Delegate(s).

   If an athlete's Sport Class changes during the Classification Evaluation Period the athlete, someone acting on his behalf or an official representative of a team is required to notify of their intention for the athlete's re-entry immediately after publication of the classification outcomes.

   Athletes who are subject to re-entry may only be permitted to re-enter in the same event(s) that they had been previously entered of the revised class. In the event that an athlete cannot be entered into an event due to lack of availability in his revised class, he may request to enter an alternative available event of his revised class.

   During the competition period, the Sport Class of an athlete may change after Observation in Competition or classification protests and may affect an athlete's Sports Class, result(s), placing and record(s) at that competition in accordance with Rule 52.4 of these Rules. If the athlete is entered in other events of his previous Sport Class at the same competition, he may be re-entered in those events of his revised Sport Class subject to the approval of the Technical Delegate(s).

   If at any stage of the athlete's evaluation WPA or a Classification Panel is unable to allocate a Sport Class to the athlete, the athlete may be designated with Classification Not Completed (CNC) in accordance with Article 10 of the WPA Classification Rules and Regulations. Any athlete who has been designated as CNC following Observation in Competition shall be shown in the official results as DNF and any performances achieved by the athlete in that Competition shall be void.

COMMENT: The following criteria should be considered when determining re-entry after

changes in Sport Class:

The minimum eligibility criteria for the newly allocated sport class have been met;
The event(s) is/are offered in the newly allocated sport class;
The maximum entries per team have not been reached;
The competition of the concerned event(s) has not started;
The competition schedule is not affected.

Failure to Participate

4. At IPC Games and IPC Competitions (see Part B - 3.1.2 (a) and (b)), an athlete shall be excluded from participation in all further events (including other events in which he is simultaneously participating) in the competition, including relays, in cases where:

   a) A final confirmation was given that the athlete would start in an event but then failed to participate;
   Note: A fixed time for the final confirmation of participation shall be published in advance.
   b) An athlete qualified in a qualifying round of an event for further participation in that event but then failed to participate further;
   c) An athlete and/or the accompanying guide-runner failed to compete honestly with bona fide effort. The relevant Referee will decide on this and the corresponding reference must be made in the official results.
   However a medical certificate, provided by and based on an examination of the athlete by the Medical Delegate appointed under Rule 2.2 or if no Medical Delegate has been so appointed, by the Medical Officer of the LOC, may be accepted as sufficient evidence that the athlete and/or the accompanying guide-runner became unable to compete due to illness or injury, even if he is able to compete in further events on a subsequent day of the competition. Other justifiable reasons (e.g., factors independent of the athlete's own actions, such as problems with the official transport system) may also be accepted by the Technical Delegate(s).

   d) An athlete fails to report to the Call Room(s) for an event in contravention of Rule 5.5.

COMMENT: The relevant Referee, once aware of such a situation and is satisfied that the athlete who abandoned the race was not competing with a bona fide effort, must make a reference to this in the relevant results as "DNF Rule 5.4.(c)". Either in the process of the Referee making such a decision or the Jury of the Appeal considering any protest arising from it,

reasons for the withdrawal or non-participation proposed by or on behalf of the athlete can be considered. The Rule sets out the process that should explicitly be followed in the case of a medical reason.

Failure to Report to the Call Room(s)

5. Except as provided below, an athlete shall be excluded from participation in any event in which he is not present in the Call Room(s) at the relevant time as published in the Call Room schedule. He shall be shown in the results as DNS. The relevant Referee will decide on this (including whether the athlete may compete under protest if a decision cannot be made immediately) and the corresponding reference must be made in the official results.

   Justifiable reasons (e.g. factors independent of the athlete's own actions, such as problems with the official transport system or an error in the published Call Room schedule) may, after confirmation, be accepted by the Referee and the athlete may then be allowed to take part.

COMMENT: As the rule states, the athlete must be present in the Call Room(s) at the appropriate time. This does not mean standing outside the Call Room. The Technical Regulations for the Competition will outline the Call Room procedures which must be followed. The Relevant Referee shall decide if the athlete has attended the Call Room(s) on time or if there is a Justifiable reason for not being present on time. The Referee may allow an athlete to compete under protest if a decision cannot be made immediately.

It is important to note that if the athlete has been listed as "DNS" on the results sheet, he shall be excluded from all further events of the competition (save where the "DNS" is as a result of Rule 6.16).

Rule 6: Clothing, Shoes, Athlete Bibs, Prosthetics and Orthotics, Eye mask, Tether, Non-compliance on Equipment and Helmets

(Rule 143)

6.1 Clothing

6.1.1 In all events, athletes and guides must wear clothing that is clean, and designed and worn so as not to be objectionable. The clothing must be made of a material which is

non-transparent even if wet. Athletes must not wear clothing that could impede the view of the Judges.

6.1.2 Any athlete who removes an article of clothing inappropriately, such as taking off his top after the finish of an event to expose his torso, shall, for a first offence in that Competition, be warned by the Referee in accordance with Rule 2.13.5. For a second offence in that Competition, the Referee shall disqualify the athlete in accordance with Rule 2.13.5.

6.1.3 Where appropriate, athletes shall participate in the uniform clothing approved by their national governing body. The Victory Ceremony and any lap of honour are considered part of the competition for this purpose.

Note (i): In Seated Throwing Events clothing must be close fitting, and not loose, so that the view of the judges is not impeded.

COMMENT: Prior to entering the field of play Officials in the Call Room may require an athlete to change their clothing if it is deemed to be in-appropriate or objectionable. If an athlete refuses to follow the requirements of the Call Room Judges, the relevant Referee shall warn the athlete and issue a yellow or red card as deemed appropriate.

Athletes may be asked by Officials to adjust their clothing to make it easier for the Officials to observe their form, such as in a Seated Throwing Event.

6.2 Shoes - General

6.2.1 Athletes may compete barefoot or with footwear on one or both feet. The primary purpose of shoes for competition is to give protection and stability to the feet and a firm grip on the ground. They must not give athletes any unfair assistance or advantage.

6.2.2 Any shoe which appears on the World Athletics list of approved competition shoes, updated and published from time to time by World Athletics, may also be used in corresponding events in WPA Competitions. Any shoe not on such list must comply with all other terms of Rules 6.2 - 6.7 of these rules in order to be used in WPA Competition.

COMMENT: For example, if a shoe is listed on the World Athletics list of approved competition shoes in the category “track from 800m”, athletes may also use this shoe for World Para Athletics track events of 800m or longer.

6.2.3 Any type of shoe used must be reasonably available to all in the spirit of the universality of athletics. A shoe that meets the criteria set out in this Rule 6.2 may be customised to suit the characteristics of a particular athlete's foot. However, one-off shoes made to order (i.e., that are only ones of their kind) are not permitted.

6.2.4 Where WPA has reason to believe that a type of shoe or specific shoe technology may not comply with the letter or the spirit of Rules 6.2 – 6.6, it may refer the shoe or shoe technology for detailed examination and it may prohibit the use of such shoes or technology in competition pending examination.

6.3 Shoes - Number of Spikes

The sole of the shoes and/or prosthetic(s) (including the part beneath the shoe) may be so constructed as to provide for the use of up to 11 spikes. Any number of spikes up to 11 may be used but the number of spike positions shall not exceed 11.

6.4 Shoes - Dimensions of Spikes

That part of each spike which projects from the sole or the heel shall not exceed 9mm except in the High Jump and Javelin Throw, where it shall not exceed 12mm. The spike must be so constructed that it will, at least for the half of its length closest to the tip, fit through a square sided 4mm gauge. If the track manufacturer or the stadium operator mandates a lesser maximum, or prohibits the use of certain shaped spikes, this shall be applied and the athletes notified accordingly.

Note: The surface must be suitable for accepting the spikes permitted under this rule.

COMMENT: The revised spike length requirement would normally be outlined in the Team Manual or technical requirements for the competition.

6.5 Technical Requirements for Shoes - The Sole

6.5.1 The sole of the shoe (including the part beneath the heel of the shoe) may have grooves, ridges, indentations or protuberances, provided these features are constructed of the same or similar material to the basic sole itself. The maximum

thickness of the sole of the shoe is set out at Rule 6.6.

6.5.2 *The thickness of the sole shall be measured at the centre of the forefoot and the centre heel of the shoe as the distance between the inside top side and the plane of the outside under side at the centre of the forefoot and heel respectively. This measurement includes the above-mentioned features. See Figure (1) below:*

Figure 1 – Measuring the thickness of the sole

6.5.3 The centre of the forefoot of the shoe is the centre point of the shoe at 75% of its internal length. The centre of the heel of the shoe is the centre point of the shoe at 12% of its internal length. See Figure (2), below. For a standard sample unisex size 42 (EUR), the centre of the forefoot of the shoe will be the centre point of the shoe approximately 203mm from the inside back of the shoe, and the centre of the heel of the shoe will be the centre point of the shoe approximately 32mm from the inside back of the shoe. The thickness of the sole outside of these points is not relevant for the purposes of meeting the requirements of these Rules.

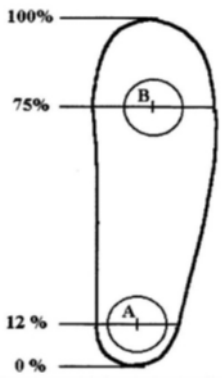

Figure 2 – Location for measurement of the centre of the forefoot and heel

6.5.4 WPA acknowledges that a shoe above that standard sample size might contain a marginally thicker sole than that of a standard sample size shoe of the same make and model, which marginal increase in sole thickness is only attributable to the larger size of the shoe. Such marginal increases will be disregarded for the purposes of confirming compliance with these Rules.

6.6 Until further notice, unless in exceptional circumstances and specifically agreed by WPA in writing, any shoe used in competition:

a) (except where Rule 6.6.(c) applies) must not contain more than one rigid structure (e.g. plate, blade etc.) whether that structure runs the full length of the shoe or only part of the length of the shoe;

b) the one rigid structure referred to in Rule 6.6.(a) may be in more than one part, but those parts must be located in one plane (i.e. must not be tacked above each other, must not overlap);

c) may contain one additional rigid structure or other mechanism (e.g. plate, blade etc.) only where used solely to attach spikes to the outer underside of the shoe. For the avoidance of doubt, the additional rigid structure to attach spikes cannot be a continuation of the rigid structure referred to in Rule 6.6.(a);

d) must not contain any embedded 'sensing or intelligent' technology whatsoever. This does not prevent heart rate or speed distance monitors or stride sensors carried or worn personally by an athlete pursuant to Rule 7.4.(d);

e) must have a sole with a maximum thickness as set out in the table below.

Shoe Sole Thickness Table – in force until 31 October 2024

Event	Maximum thickness of the sole (as per Rule 6.6)	Further Rule Requirement/Note
Field Events (except Triple Jump)	20mm	Applies to all Throwing Events for ambulant athletes and Jumping Events except the Triple Jump. For all Field Events, the sole at the centre of the athlete's forefoot must not be higher

		than the sole at centre of the athlete's heel referred to at Rules 6.5.2 and 6.5.3 (i.e., at centre point of the shoe at 12% and 75% of the shoes internal length).
Triple Jump	25mm	The sole at the centre of the athlete's forefoot must not be higher than the sole at centre of the athlete's heel referred to at Rules 6.5.2 and 6.5.3 (i.e., at centre point of the shoe at 12% and 75% of the shoes internal length).
Track Events up to but not including 800m	20mm	For relays the rule applies to the distance of the leg being run by each athlete.
Track Events from 800m and above	25mm	For relays the rule applies to the distance of the leg being run by each athlete.
Road Events	40mm	

New Sole Thickness Table – in force from 1 November 2024

Event	Maximum thickness of the sole (as per Rule 6.6)	Further Requirement/Note
Track Events	20mm spike shoe or non-spike shoe	For relays, the rule applies to the distance of the leg being run by each athlete.
Field Events	20mm spike shoe or non-spike shoe	For all Jumping Events, the sole at the centre of the athlete's forefoot must not be higher than the sole at centre of the athlete's heel referred to at Rules 6.5.2 and 6.5.3 (i.e., at centre point of the shoe at 12% and 75% of the shoes internal length).
Road Events	40mm	

Important notice: from 1 November 2024 an existing shoe whose sole is greater than the maximum thicknesses set out in the above table is no longer approved and cannot be worn in competitions.

6.7 Shoes - Inserts and Additions to the Shoe

Athletes may not use any appliance, either inside or outside the shoe, which will have the effect of increasing the thickness of the sole above the permitted maximum, or which can give the wearer any advantage which he would not obtain from the type of shoe described in the previous paragraphs.

COMMENT: Please refer to the further rules on shoes set out at Rules 6.9 (Non-Compliance) and Rule 6.6 above.

6.8 Athlete Bibs

6.8.1 Every athlete shall be provided with two bibs, which during the competition, shall be worn visibly on the breast, back and/or on his competition equipment (i.e., racing chairs, Running frames and throwing frames), as set out in the table below. Either the athletes' names or other suitable identification will be allowed instead of numbers on any or all of the bibs. If numbers are used, they shall correspond with the number allocated to the athlete on the start list or in the programme. If track suits are worn during the competition, bibs shall be worn on the track suit in a similar manner.

Bib allocation table

	Track Events	Jumping Events	Field Events
Ambulant Athletes	1 bib on back and 1 bib on breast	1 bib on breast or back	1 bib on back and 1 bib on breast
Wheelchair Racing	1 bib on back of the racing chair Optional: and 1 bib on the athlete's helmet		
Seated Throws			1 bib on back of throwing chair and 1 bib on breast
Frame Running	1 bib on back of athlete Optional: and 1 bib on the athlete's helmet or on the side of frame		

6.8.2 One of the bibs shall be visibly displayed on the back of the racing chair and the throwing frame and on the side of the Running frame in accordance with the bib allocation table above.

6.8.3 Athletes must not wear any bibs on their leg instead of on their breast or back.

6.8.4 These bibs must be worn as issued and may not be cut, folded or obscured in any way. In long distance events, the bibs may be perforated to assist the circulation of air, but the perforation must not be made on any of the lettering or numerals that appear on them.

6.8.5 Where a Photo Finish System is in operation, the LOC may require athletes to wear additional number identification of an adhesive type on the side of their shorts or lower body as determined by Call Room or other Technical Officials.

For athletes competing in all individual and team track and road wheelchair and Frame Running races, these additional number identifications shall be worn on the helmet.

6.8.6. No athlete shall be allowed to take part in any competition without displaying the appropriate bib(s) and/or identification.

6.9 Non-Compliance in relation to clothing, shoes and bibs

If an athlete does not follow any part of any of the Rules 6.1 – 6.8 to and:

a) refuses the direction of the relevant Referee or other official to comply; or
b) participates in the competition,
he shall be disqualified.

COMMENT: This Rule 6.9 prescribes the sanction if any aspect of any of the Rules 6.1 – 6.8 is not followed. It is expected however that where possible the relevant officials should request and encourage the athlete to comply and to advise him of the consequence if he does not. But where an athlete does not follow an aspect of the Rule during competition, and it is not practical for an official to request compliance athletes should note that disqualification may follow. It is a responsibility of the Starters Assistants and Umpires (for Track and Out of Stadium Events) and the Judges (for Field Events) to be vigilant on these matters and report any apparent breaches to the relevant Referee.

6.10 Referee directions as to shoes

6.10.1 If the Referee has a reasonable suspicion that a shoe worn by an athlete in a competition might not comply with the letter or spirit of the Rules, the Referee (or other official as directed by the Referee) may request and the athlete must immediately hand over the shoe to the Referee or such other official at the conclusion of the event for further investigation by WPA.

However, where it has already been declared that a shoe does not comply with the spirit of the Rules, the relevant Referee shall immediately act in accordance with Rule 6.9.

6.10.2 When shoes have been handed over by the athlete under this Rule and the athlete intends to subsequently compete in later rounds of the same event or in other events during the same competition, the Referee or other official shall ensure the shoes are available to the athlete to use in each such subsequent event. How, when and on what conditions the shoe is made available to the athlete during the competition is at the Referee's discretion.

6.11 Exceptions to Rules 6.2, 6.5, 6.7 or 6.6

6.11.1 If an athlete presents with an anatomical limitation (for example leg length difference or foot deformity) that prevents adherence to the requirements of Rule 6.2, 6.5, 6.7 or 6.6, then an assessment shall be made by WPA in advance of the event and an exception may be granted.

6.11.2 The shoe worn by the athlete on the other non-impaired foot and/or leg must comply with the requirements of Rules 6.2, 6.5, 6.7 and 6.6.

6.11.3 WPA may establish a process for applications under this Rule to be considered.

6.12 Prostheses

6.12.1 Athletes in Sport Classes T/F61-64, with lower limb deficiency and leg length difference (meeting the Minimum Impairment Criteria Sec. 2.1.4.1 and Sec. 2.1.7 of appendix one of the WPA Classification Rules and Regulations) may wear lower limb prosthetic device(s) in order to ensure both legs are balanced and to allow for symmetric

movement during Competition. Such prosthetic device(s) shall not provide any other assistance to the athlete or breach any of the fundamental principles outlined in Part B – 7.1.

a) In Track and Road Events, athletes in Sports Classes T61-64 shall compete with lower limb prosthetic device(s) and shall complete the race with such device(s). Prostheses are considered an extension of the athlete's body. If the athlete finishes the race without the prosthetic device(s), the athlete shall be disqualified.

b) In Field Events, athletes in Sports Classes T/F61-64, the use of lower limb prosthetic device(s) is optional. Prior to the start of the Event, the athlete shall notify the relevant Official of his intention. If an athlete decides to compete with the prosthetic device(s), he shall complete all trials from start to finish with such device(s). If the athlete does not, such trial(s) shall be considered a failure.

COMMENT: In the case that the athlete decides to use the lower limb prosthetic device(s) (i.e., in High Jump or Long Jump), the relevant Official shall ensure that Rule 25.7 and Rule 27.14 are observed.

6.12.2 For Sport Classes T/F61-62 the actual height of an athlete in his Competition leg prostheses shall not exceed his Maximum Allowable Standing Height (MASH) in accordance with WPA Classification Rules and Regulations. The height of athletes shall be measured at the Call Room by Call Room Judges. If an athlete exceeds his MASH then the athlete will not be permitted to start the event and shall be shown in the results as "DNS" in accordance with Rule 6.16.

COMMENT: World and Regional Records - For the purpose of record ratification, all World and Regional Records achieved by athletes in Sport Classes T/F61-62 must comply with Rule 51.10 Note (i).

6.12.3 For athletes in Sport Classes T45-47 and F45-46 with upper limb deficiency (meeting the Minimum Impairment Criteria Sec. 2.1.4.2., 2.2.1.1, and 2.2.2.1. of appendix one of the WPA Classification Rules and Regulations), the use of upper limb prosthetic device(s) is optional.

a) In Track and Road Events, athletes in Sport Classes T45-47, that choose to compete with the upper limb prosthetic device(s), shall complete the race with such device(s). Since the use is optional, the athlete may decide whether or not to use the upper limb prosthetic device(s) in the next race (e.g., in the semi-final or final in 100m). Prostheses are considered an extension of the athlete's body. Once the race starts, athletes running with upper limb prosthetic device(s) must reach the leading edge of the finish line with such device(s). If the athlete finishes the race without the prosthetic device(s), the athlete shall be disqualified.

b) In Field Events, athletes in Sport ClassesT45-47 and F45-46, the use of upper limb prosthetic device(s) is optional. Prior to the start of the Event, the athlete shall notify the relevant Official of his intention. If an athlete decides to compete with the prosthetic device(s), he shall complete all trials from start to finish with such device(s). If the athlete does not, such trial(s) shall be considered a failure.

COMMENT: In the case that the athlete decides to use the prosthetic device(s) (e.g., in High Jump or Long Jump), the relevant Official shall ensure that Rule 25.7 and Rule 27.14 are observed.

6.13 Orthoses

6.13.1 For athletes in Sports Classes T32-34/F31-34, T/F35-38, T/F42-44 and T51-54/F51-57 with Lower Limb Impairment with two anatomical limbs, the use of orthotic device(s) is optional.

6.13.2 In Sport Classes T32-34/F31-34, T/F35-38, T45-47/ F45-46 and T51-54/F51-57, athletes with Upper Limb Impairment, the use of orthotic device(s) is optional.

6.13.3 For athletes with lower and/or upper limb impairment the use of assistive devices other than those permitted in Rule 6.12 or this Rule 6.13 to facilitate running is not allowed.

COMMENT: Up until 01 January 2018, Sport Classes T/F42-44 included both athletes who competed with a prosthetic device(s) and athletes who did not. Recent findings indicate that the use of prosthetic device(s) may provide a performance advantage in Track Events.

6.14 Eye mask

6.14.1 Athletes in Sport Classes T/F11 must have their eyes/eye cavities completely covered by gauze patches or an equivalent material and must wear approved opaque glasses or an appropriate substitute during all track and/or field events. These opaque glasses or their substitute must completely cover the eyes of the competitor and must be checked and approved by the responsible technical official and must in their opinion be effective in blocking out all light. These opaque glasses or their substitute may be inspected again at any time, including immediately before the start and/or after finish.

6.14.2 It is the responsibility of the athlete to provide the eye patches, eye masks / opaque glasses and to ensure that these eye patches, eye masks and opaque glasses or appropriate substitute meet the requirements set out in 6.14.1. If an athlete arrives at the call room and a) does not have eye patches, and/or an eye mask/opaque glasses/appropriate substitute, or b) the eye patches, an eye mask/opaque glasses/appropriate substitute fails to comply with this Rule 6.14, Rule 6.16 shall apply.

6.14.3 Eye patches and eye masks / opaque glasses or appropriate substitute must be worn from the time the athlete leaves the Call Room until the end of the event (after the athlete has crossed the leading-edge of the finish line in track events or after the end of the athlete's final trial in field events) or after an athlete has retired from an event. Save for where Rule 6.14.4 applies, any athlete who removes his eye patches and/or eye mask/opaque glasses before the end of the event or before retiring from an event shall, for a first offence, be warned by the Referee in accordance with Rule 2.13.5. For a second offence in that Competition, the Referee shall disqualify the athlete in accordance with Rule 2.13.5

6.14.4 In field events an athlete may temporarily remove the eye mask / opaque glasses (but not eye patches) between trials in the event.

6.14.5 It is not required for athletes to wear eye patches and masks during road races.

COMMENT: It is important for ITOs to remember that as Referees they must ensure that inspection of eye patches and eye masks must be conducted in the Call Room (see Rule 2.24) and that athletes wear proper eye patches and masks during the events for which they are intended to be worn. Where an athlete wishes to remove the eye patches or eye mask, they

must ask for permission to do so. This shall not be unreasonably withheld by the Referee or Chief Judge of the event.

While in a Track Event the eye patches and eye masks are normally in place at the starting line and remain for the duration of the event; however, in some Field Events an athlete may remove their eye mask/opaque glasses between attempts. If they do so, the Judges and Referee need to observe that they are replaced by the athlete or his assistant prior to their next attempt.

Failure to wear the eye patches and eye masks correctly will result in disqualification of the athlete. This may include where the eye patch or eye mask falls off during a Track Event.

6.15 Tether

6.15.1 When competing with a guide-runner, athletes in Sport Class T11 and T12 shall be guided through a tether which shall be supplied by the athlete and shall comply with Rule 6.15.4. If such an athlete arrives at the call room and a) does not have a tether, or b) the tether is not in compliance with Rule 6.15.4, Rule 6.16 shall apply.

6.15.2 Only one tether shall be used between an athlete and his guide-runner(s) during a race.

6.15.3 If during a race their tether breaks then the athlete shall be disqualified.

COMMENT: It is the responsibility of the athlete to ensure that their tether is durable and serviceable and that, in the event that the tether breaks during a race, he will be disqualified under Rule 7.9.

6.15.4 The tether shall be made from non-elastic material and shall not store energy and/or offer a performance gain to an athlete. It shall consist of two closed holding loops and a middle section with two fixed spherical stoppers at each end.

a) For track events, the maximum length between the two furthest points of the holding loop at the full extension of the tether shall not exceed 30cm. For road events, the maximum length between the two furthest points of the holding loop at the full extension of the tether shall not exceed 50cm. Each tether shall be measured in the Call Room at its full extension when the tether is not being worn.

b) The holding loops shall not incorporate any mechanism that allows the loops to open. The holding loops may incorporate a locking mechanism, which can be easily operated by the athlete and that allows the size of the loops to be adjusted

and locked. This adjustable locking mechanism shall not in any way be extended beyond the two fixed spherical stoppers and shall not shorten the middle section. The middle section shall be a minimum of 10cm in length and shall be measured at its full extension from the closest points of the two spherical stoppers. The middle section shall be of a distinctive colour and be distinguishable from a distance to the rest of the tether. The stoppers shall be sphere-shaped (or spherical) and a minimum of 1cm in diameter.

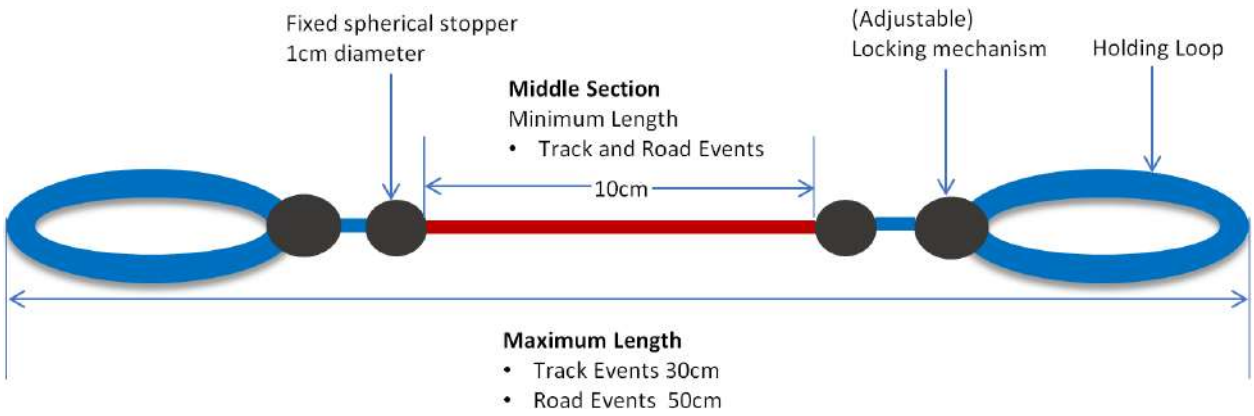

Figure 3 – Tether features

COMMENT: The above Figure 3 shows the minimum and maximum length that must be observed and respected at all times during the races for Track and Road Events. The Call Room Judges will conduct the appropriate inspection and will ensure that the length of the tether complies with the above Rule 6.15.1 and Rule 6.15.4.

6.16 Non-compliance on equipment

6.16.1 An athlete (and in the case of a relay, his team) may be excluded from participation in any event in which his competition equipment (i.e., racing chairs, Running frames, throwing frames, prosthetic device(s), helmets, tethers and eye masks) is not compliant with the rules. In such circumstances, the Call Room Referee (or other appropriate referee) must issue the athlete with a yellow card.

6.16.2 If the athlete is able to make the necessary adjustments to ensure compliance with the rules or is able to obtain the missing equipment (e.g. borrowing a tether from the LOC), prior to the scheduled exit from the Call Room, he shall be permitted to compete. No event shall be delayed while an athlete makes adjustments to their equipment.

6.16.3 If an athlete fails to comply with this Rule, then the athlete (and in the case of a relay, his team) will not be permitted to start the event and he (and in the case of a relay, his team) shall be shown in the results as "DNS". A reference shall be made in the official results to the Rule that has been infringed (for example, DNS + YC 6.12.2). In such circumstances, the athlete shall not be excluded from participation in further events of the competition under Rule 5.5.

6.16.4 If the athlete's equipment is non-compliant for any subsequent event, then he shall also be excluded from that event. In such circumstances, the Call Room Referee (or other appropriate referee) shall show the athlete a second yellow card followed immediately by a red card and in such circumstances the athlete shall be excluded from participation in further events of the competition.

6.16.5 The provisions of this Rule 6.16 relating to the issuing of a yellow card and/or red card by the appropriate Referee will also apply in circumstances where an athlete, having started or completed an event, is subsequently disqualified from that event for having competed using non-compliant equipment.

COMMENT: Under such circumstances where the athlete's equipment is non-compliant with the rules and in order to be consistent with the application of the rules, it is recommended that the Call Room Referee keep a written record of the yellow and red cards that have been issued.

6.17 Helmets

Helmets for Sport Classes T31-34, T51-54.

6.17.1 The wearing of helmets is compulsory in all track and road wheelchair races and Frame Running races. The helmet shall be a hard-protective shell that has a recognised international safety standard e.g.: Snell b-84/90/95, BSI 6863, EN 1078.

6.17.2 If an athlete arrives at the Call Room and a) does not have a helmet, or b) the helmet is

not in compliance with Rule 6.17.1, Rule 6.16 shall apply.

6.17.3 The helmet must be worn from the time the athlete leaves the Call Room until the end of the race. Any athlete who removes their helmet during this time, shall, for a first offence in that Competition, be warned by the Referee in accordance with Rule 2.13.5. For a second offence in that Competition, the Referee shall disqualify the athlete in accordance with Rule 2.13.5.

6.17.4 The purpose of this Rule 6.17 is to ensure the safety of all athletes while on the track and is not intended to punish the temporary removal of a helmet for genuine reasons. For example, should an athlete need to briefly adjust their helmet while stationary, this shall not require disciplinary action.

COMMENT: For safety reasons, athletes covered by this Rule are advised to wear a helmet on the track at all times (i.e. including after the race.)

6.18 Urine Storage Devices

Athletes must ensure that urine is not allowed to drain from storage devices such as leg bags onto the competition or warm-up areas. Failure to do so may result in disqualification.

Rule 7: Assistance to Athletes

(Rule 144)

Medical Examinations and Assistance

1.

a) Medical examination / treatment and/or physiotherapy may be provided either on the competition area itself by the official medical staff appointed by the LOC and identified by armbands, vests or similar distinctive apparel or in designated medical treatment areas outside the competition area by accredited team medical personnel specifically approved by the Medical or Technical Delegate for the purpose. In neither case shall the intervention delay the conduct of the competition or an athlete's trial in the designated order. Such attendance or assistance by any other person, whether immediately before

competition, once athletes have left the Call Room, or during competition, is assistance.

b) An athlete shall retire at once from an event if ordered to do so by the Medical Delegate, or a medical doctor who is a member of the official medical staff, identified by armbands, vests or similar distinctive apparel.

Note: The competition area, which normally also has a physical barrier, is defined for this purpose as the area where the competition is being staged and which has an access restricted to the competing athletes and to personnel authorised in accordance with the relevant Rules and Regulations.

2. Any athlete giving or receiving assistance shall be warned by the Referee and advised that, if there is any repetition, he will be disqualified from that event. If an athlete is subsequently disqualified from the event, any performance accomplished up to that time in the same round of that event shall not be considered valid. However, performances accomplished in a previous round of that event shall be considered valid.

   Note: in cases under Rules 7.3 (a) or 7.3(f) disqualification may be made without warning.

3. For the purpose of this Rule the following examples shall be considered assistance, and are therefore not allowed:

   a) Save as otherwise permitted below, pacing in races by persons not participating in the same race, by athletes lapped or about to be lapped or by any kind of technical device (other than those permitted under Rule 7.4 (d);

   b) Possession or use of video recorders, radios, CD, radio transmitters, mobile phones, or similar devices in the competition area which have the capacity to communicate;
   Note: Possession or use of items specified within Rule 7.3 b) also applies to athlete's assistants and guide-runners.

   c) Except for devices complying with Rule 6.12, the use of any technology or appliance that provides the user with an advantage which he would not have obtained using the equipment specified in these Rules.

   d) Provision of advice or other support by any official of the competition not related to or required by his specific role in the competition at the time (e.g. coaching advice, the take off point in a Jumping Event except to indicate a failure in horizontal jumps, time or distance gaps in a race etc.).

COMMENT: Rule 7.3(d) however makes it clear that the officials should not assist any athlete

beyond what is required of their role – and specifically states as an example that officials should not provide details of the take-off position in jumping events, other than for the purpose of indicating the point of "impact" in a foul jump in Horizontal Jumps.

e) Ambulant athletes who are competing from a standing position using a wheelchair to access the field of play
f) Receiving physical support from another athlete (other than helping to recover to a standing position) that assists in making forward progression in a race.

COMMENT: Any physical or technological action or activity that provides an athlete with an unfair advantage is not permitted on the field of play. Any device that has the capacity to be used for communicating is prohibited from the field of play. Speedometers attached to wheelchairs that have a GPS component, may be allowed as long as communication function is not included (see Rule 7.3(b)).

Call Room Judges will inspect the racing wheelchair frame as well as the helmet and athlete's ears to ensure the athlete is not in possession of any device that has the capacity to communicate. Note that further inspections may be conducted at any time. This rule applies to all athletes and their guide-runners (or assistants) on the field of play. Call Room Judges are advised to always check athletes and their guide-runners (or assistants) to ensure compliance with this rule.

It is also not considered appropriate for ITOs and other Technical Officials to use cell phones, cameras or other similar devices while on the field of play except for an officiating purpose.

4. The following should not be considered assistance:

a) Communication between the athletes and their coaches not placed in the competition area. In order to facilitate this communication and not to disturb the staging of the competition, a place in the stands, close to the immediate site of each Field Event, should be reserved to the athletes' coaches;
Note: coaches and other persons otherwise complying with Rule 49.8 may communicate with their athlete(s).
b) Medical examination / treatment and/or physiotherapy necessary to enable an athlete to participate or continue participation once on the competition area under Rule 7.1.
c) Any kind of personal safeguard (e.g., bandage, tape, belt, support, wrist cooler,

breathing aid etc.) or device (e.g. hearing amplifier/aid) for protection and/or medical purposes. The Referee, in conjunction with the Medical Delegate and, in some cases also an International Classifier, shall have the authority to verify any case should he judge that to be desirable. (See also Rule 30.5 and Rule 34.5)

d) Heart rate or speed distance monitors or stride sensors or similar devices carried or worn personally by athletes during an event, provided that such device cannot be used to communicate with any other persons.

e) Viewing by athletes competing in Field Events, of images of previous trial(s), recorded on their behalf by persons not placed in the competition area (see Rule 7.1 Note). The viewing device or images taken from it must not be taken into the competition area.

f) Hats, gloves, shoes, items of clothing provided to athletes at official stations or when otherwise approved by the relevant referee.

g) Receiving physical support from an official or other person designated by the LOC to recover to a standing position or to access medical assistance.

h) Electronic lights or similar appliance indicating progressive times during a race, including of a relevant record.

i) The use of a flag, a strobe light, other visual device or the touching of the athlete by an official to signal the start of a race (see Rule 17.2 Note).

5. WPA recognises the special needs of athletes with a hearing impairment and is keen to encourage and facilitate their participation in competition. In cases where deaf-blind athletes are competing in an event the Technical Delegate shall have the authority to make appropriate modification to these rules as may be necessary to facilitate the effective participation of those deaf-blind athletes. In principal, no rule modification that disadvantages any other athlete will be allowed.

   Note (i): No hearing aid/amplification of external cochlear implant parts containing radio transmission or reception components shall be permitted in the competition area under Rule 7.3.b.

Assistance – Track and Road Events

6. Athletes shall provide their own guide-runner(s).

COMMENT: The intention of this rule is to ensure compliance with the IPC Athlete Nationality Policy and to protect athletes from being adversely impacted by a guide-runner that they do not

know.

7. Guide-runners for athletes in Sport Classes T11-12 shall be permitted and shall not therefore be considered assistance or pacing. Athletes in Sport Class T11 shall compete accompanied by a guide-runner for all events. Athletes in Sport Class T12 have an option of being accompanied by a guide-runner or competing by themselves. The LOC shall provide distinctive vests to identify guide-runners.

8. When a T11-12 athlete starts the event with a guide-runner, the athlete and guide-runner(s) must both finish the event with bona fide effort in accord with these rules for the performance to be recognised.

COMMENT: If the appropriate Referee is in any doubt that an athlete and/or guide-runner have made a bona fide effort in a specific event, available video evidence shall be considered. If the available video evidence is conclusive, then the athlete would be disqualified under Rule 8.2.

7.9.1 During a race, the method of guidance between an athlete and his accompanying guide-runner shall be through a tether. In addition, the athlete may receive verbal instruction from the guide-runner. The guide-runner must complete his task while running (or walking) and is not allowed to use any mechanical means of transport.

7.9.2 The tether attachment shall only be established between hand(s) and/or arm(s) of the athlete and his accompanying guide-runner. The athlete and his accompanying guide runner may not hold hands, wrists or any other part of the other's body so as to make the tether superfluous.

7.9.3 The athlete and his accompanying guide-runner shall retain the tether attachment from the start of the race until the end of the race. No release shall be allowed until after the athlete and his accompanying guide-runner have both reached the vertical plane of the nearer edge of the finish line and finished the race, except during the process of interchange of guide-runners.

7.9.4 At no point during a race shall an athlete or his guide-runner(s) be permitted to hold on to a stopper and/or any part of the middle section in a way that shortens the length of the tether.

7.9.5 If an athlete and/or guide-runner fails to comply with any part of this Rule 7.9, the competing pair (the athlete and guide-runner) shall be disqualified.

COMMENT: For safety reasons, in all races, the guide-runner must not release the athlete before the finish line. It is sometimes difficult to determine if a release of the tether has taken place prior to the finish line. Therefore, at IPC Games and IPC Competitions, if the official is in doubt, he can refer to the Video Referee or the Chief Judge Photo Finish to make a determination.

7.10.1 The guide-runner is not allowed to push, pull or otherwise propel athletes in order to gain an advantage at any stage during a race.

7.10.2 Slingshotting is regarded as a technique whereby the guide-runner deliberately hurls his arm (attached to the athlete) forward in order to exert propulsion towards the athlete's running direction. Such a technique is not permitted at any stage during a race.

7.10.3 A guide-runner may assist an athlete who has tripped or fallen to regain his footing and/or orientation as long as such assistance does not provide any advantage to the athlete towards his running direction.

7.10.4 If an athlete and/or guide-runner fail to comply with any part of this Rule 7.10, the competing pair (the athlete and guide-runner) shall be disqualified.

COMMENT: It is important for ITOs and other Technical Officials assigned at Track or Road Events to watch for pushing, pulling, propelling or slingshotting. The athlete must be the one dictating the running style and cadence of the event, not the guide-runner. If the guide-runner is dictating the running style this can often be observed where an athlete has an exaggerated upper arm or shoulder movement which seems unnatural. In many cases it may be difficult to observe pushing, pulling or propelling without the use of video analysis. Slingshotting is usually easy to observe at the finish line where the guide-runner will propel the athlete forward to ensure that the athlete finishes before the guide-runner.

7.11.1 For races of 5000m or longer athletes are allowed to use two guide-runners. However, only one interchange of guide-runners is permitted for each athlete per race. The interchange must take place without any hindrance to other athletes and must take place only on the back straight in track events, or at the designated location in Road events (See Rule 49.13).

7.11.2 Should there be an interchange of guide-runners, the athlete and the substituting guide-runner must both finish the event in order for the performance to be recognised.

7.12.1 The intention to interchange guide-runners must be notified in advance to the Referee and Technical Delegate. The Technical Officials will determine the conditions of the interchange and will communicate these in advance to the athletes.

7.12.2 If the interchange does not take place after the technical arrangement being made, the athlete shall be disqualified from the race.

COMMENT: Technical Officials who are assigned to Track or Road Events must watch guide-runner exchanges carefully to ensure they occur in accordance with these rules. The guide-runner exchange should be established on the back straight, or at the pre-determined designated location in road events, and a Technical Official(s) should be assigned with ensuring that the guide-runners are properly positioned on the outside of the track/course in preparation for the guide-runner exchange. The assigned Technical Official must ensure that guide-runners preparing for exchange do not interfere with other events and activities that may be occurring nearby. For example, in track events, if there is a "rail camera" on the back straight guide-runners should not be positioned between the "rail camera" and competing athletes except during actual guide exchange.

The assigned Technical Official must have a copy of the exchange specifics (that is the names of the athlete(s) who intend to interchange guide-runners and the lap(s)/location that these exchanges will occur). The assigned Technical Official shall ensure all guide-runner exchanges only occur as planned. After the exchange has occurred, the outgoing guide- runner shall be escorted out of the competition area by a Technical Official or accredited volunteer.

If an exchange does not occur in accordance with the above process the assigned Technical Official shall report this to the Track Referee/Road Race Referee for final determination. That is, whether or not to disqualify the athlete.

13. Some athletes in Sports Classes T12, T20, T71-72 (Frame Running), T35-38, T42-47 and T61-64 may require their starting blocks to be set for them by the Starter's Assistant. The Technical Delegate will provide the appropriate athletes and/or their team coach with a document on which to show their requirements.

Note (i): Upon request, the Technical Delegate may permit an assistant to accompany the athlete to the start to set the blocks under special circumstances. The assistant shall withdraw from the field of play prior to the start of the race.

Note (ii): Upon request, the Technical Delegate may permit an assistant to accompany the

athletes in sports classes T71-72 (Frame Running), to ensure the correct positioning of the athlete on the start line. The assistant shall withdraw from the field of play prior to the start of the race.

Note (iii): To ensure a safe transfer for those athletes in Sport Class T12 who do not run with a guide runner, an assistant may accompany the athletes through the Call Room up to the field of play. The assistant shall withdraw from the field of play prior to the start of the race.

COMMENT: Any request in this rule requires the athlete or his assistant or team leader to complete the relevant request form (such as a 'request for assistance form'). Completed forms must be presented to the TIC for approval by the Technical Delegate. If approved by the Technical Delegate the approved request form must be provided by the athlete, assistant or team leader to the Call Room Judges at the Call Room and subsequently taken with the athlete to the start line. Where Call Room Judges are in doubt as to whether or not a request has been approved, they must immediately seek clarification from the Technical Delegate.

If the rule enables an assistant to accompany an athlete a request to accompany the athlete is not necessary.

Assistance – Field Events

14. Assistants for athletes in Sport Classes F31-33 and F51-54 will be permitted (one assistant per athlete per event) who can assist the athlete under the control and supervision of the Officials to ensure the athlete transfers safely to the throwing frame and assist athletes to strap into their throwing frame.

    Note (i): Strapping must be only to the frame with non-elastic material.

    Note (ii): Should an assistant be required, the assistant shall be physically capable of transferring their athlete to the throwing frame and, in the event that the assistant is not capable, no assistance will be provided by the Technical Officials, accredited volunteers or any other person(s) without the prior approval of the Technical Delegate.

COMMENT: In IPC Games and IPC Competitions (see Part B – 3.1.2 (a) and (b)), the Referee may require the assistant(s) to withdraw from the field of play and be seated outside of the field of play while the athlete is not competing. Prior to the time that the assistant's athlete is about to compete and as the Referee reasonably considers necessary, the assistant may be enabled

to prepare the athlete for competition. In WPA Recognised Competitions, other than those referred to in Part B 3.1.2 (a) and (b), the assistant may be permitted to administer water/refreshment to their athlete during the break between their third and fourth trials. Once that assistant's athlete has finished competing, the assistant shall again withdraw from the competition area.

It is important to note assistants are only permitted for athletes in Sport Classes F31-33 and F51-54. If an athlete in different Sport Class requires assistance that athlete must complete a request for assistance form and submit this to the Technical Delegate for approval at least 24 hours prior to the event. Assistance is only permitted if the Technical Delegate approves the request.

Officials are not responsible for transferring athletes to the throwing frame. Athletes or their assistants (if permitted or approved) are responsible for this.

Technical Officials or accredited volunteers shall not provide assistance to athletes when transferring from their day-chair to the throwing frame and vice versa. Such assistance must only be performed by assistants approved by the Technical Delegate(s) in cases where such approval is required.

15. The assistant must withdraw from the competition area once they have completed these tasks and must follow any directives from officials of the event while they are in the competition area.

16. For athletes in Sport Classes F11 and F12 one assistant may bring athletes to the throwing circle or Javelin runway. The assistant may assist the athlete by orientating them with the throwing circle or on the Javelin runway before each attempt. The assistant must leave the throwing circle or Javelin runway before each attempt begins. Once the athlete is oriented, the assistant may also provide acoustic orientation before, during and after each attempt. Athletes may only be escorted from the throwing circle or Javelin runway after the officials have determined whether or not the attempt was a valid one.

    Note: If the official in charge of the event decides that an assistant who is providing acoustic orientation is in an unsafe location then the official has the right to require the assistant to move.

17. For athletes in Sports Class T11 acoustic assistance is permitted during Long Jump, Triple Jump and High Jump. However, no visual modification to the existing facility is permitted. In

events where acoustic assistance is being used complete silence shall be requested from spectators.

Note: Whenever possible, to ensure silence, events in which acoustic assistance is being utilised should not be timetabled together with other running events.

COMMENT: Often these events are scheduled at the beginning of a session where the fewest number of spectators are in the stadium. It is important that the sports presentation team, including the announcer are carefully observing the event to ensure the sports presentation does not disrupt the concentration of athletes and their assistants during the event.

18. During Jump Events athletes in Sports Classes T11 can be accompanied onto the field of play by two assistants to:

    a) act as a caller to provide acoustic orientation during the approach run in High Jump, Long Jump and Triple Jump, and/or;
    b) act as an escort to assist the athlete by positioning and orientating him on the runway before each attempt.

    Note (i): Acoustic orientation is permitted before, during and after each attempt. Once an attempt has begun, only acoustic orientation is allowed by the assistant(s) until after the officials have determined whether or not the attempt was a valid one.

    Note (ii): The assistant(s) may be positioned on or beside the Long or Triple Jump runway or behind the landing area. The assistant(s) may be in front of or behind the take-off area but shall not stand in the take-off area (powdered area) or landing area.

    Note: (iii) The assistant(s) must not stand in a position that hinders the view of Officials nor run along-side or behind the athlete during an attempt.

COMMENT: Athletes and their assistants may not physically touch each other until the Chief Judge has indicated that they may do so. This is normally after the attempt has been completed and the athlete has left the throwing circle, runway or landing area and the Chief Judge has raised the appropriate flag.

19. For athletes in Sports Class T/F12 visual modification of the existing facility is permitted during Field Events (i.e., Paint, chalk, powder, cones, flags, etc) at the discretion of the Technical Delegate. Acoustic signals may also be used.

20. For athletes in Sports Class T12, only one assistant is allowed to accompany the athlete onto the field of play to act as caller and/or escort in Jumping Events. The assistant shall

observe Rule 7.18.

21. In Field Events, the assistant shall not conduct other than permitted under Rule 7.14 to 7.20. If the official in charge of the event decides that an assistant is in breach of these rules (e.g., coaching in competition area), the athlete and his assistant(s) shall be warned by the Referee and advised that, if there is any repetition, the athlete will be disqualified from that event subject to Rule 7.2.

    Note: The LOC shall arrange separate waiting areas for athletes and their assistants.

22. Some athletes in Sports Classes T/F20, T/F35-38 and T/F42-47 may require their runway markers to be at a pre-set distance from the take-off board. In this case, prior to the competition, the markers shall be set with assistance from a Field Judge. This would also apply in the javelin. The Technical Delegate will provide the appropriate athletes and/or their team coach with a document on which to show their requirements.

COMMENT: A request for information form is required to be completed by a responsible NPC official to outline their requirements prior to assistance being granted by the Technical Delegate. The Technical Delegate may approve assistance by the specified assistant of an athlete or, but by a Field Judge. The determination will be made by the Technical Delegate to ensure there are no more people on the field of play than is absolutely necessary.

Guide Animals

23. No guide animal shall be permitted in the competition area.

Rule 8: Effect of Disqualification

(Rule 145)

Disqualification resulting from an infringement of a Technical Rule (other than Rules 2.13.5 or 17.5)

1. If an athlete is disqualified in an event for an infringement of a Technical Rule (except under Rules 2.13.5 or 17.5) any performance accomplished in the same round of that event up to the time of the disqualification shall not be valid. However, performances accomplished in a previous round of that event shall remain valid. Such disqualification from an event shall not prevent an athlete from taking part in any further event in that competition.

Disqualification resulting from exclusion under Rule 2.13.5 (including under Rule 17.5)

2. If an athlete is excluded from competition under Rule 2.13.5, he shall be disqualified from that event. If the athlete's second warning occurs in a different event, he shall be disqualified only from the second event. Any performance accomplished in the same round of that event up to the time of the disqualification shall not be valid. However, performances accomplished in a previous round of that event or other previous events shall remain valid. Such disqualification shall prevent an athlete from taking part in all further events or rounds of events (including other events in which they are simultaneously participating and relays) in that competition.

3. If a relay team is excluded from competition under Rule 2.13.5, it shall be disqualified from that event. Performances accomplished in a previous round of that event shall remain valid. Such disqualification shall not prevent any athlete or relay from that team taking part in all further events, (including other events in which he is simultaneously participating and relays) in that competition.

   Nothing shall prohibit the Referee taking action against an individual in accordance with Rule 2.13.5 and also taking action against that athlete's relay team in accordance with the same Rule, in relation to the same or a linked incident.

4. If the offence is considered serious, the Competition Director shall report it to WPA for consideration of further disciplinary action.

Rule 9: Competing Outside Sport Class – Eligibility

In accordance with the IPC Classification Code, and general principles of classification, athletes will generally compete against athletes with the same Sport Class.

The competition entry, qualification and/or eligibility documentation for Recognised Competitions may identify events where more than one Sports Classes are eligible to compete together.

At IPC Games and IPC Competitions (see Part B - 3.1.2 (a) and (b)), the grouping of the Sport Classes shall in principle be in accordance with the Classification Hierarchy Table(s) in Appendix 2.

This rule will not apply to Recognised Competitions taking place after the adoption of this version of WPA Rules and Regulations where entry criteria have been committed to prior to the date of adoption.

Where more than one Sports Class competes together in Field Events the Raza Points System may be used to determine placings (as shall be determined by the LOC and the TD, depending on whether the event is organised as a 'single class event' or a 'combined class event'). When using the Raza Points System, the numbers after the decimal place should be rounded down. E.g. 1000.501 and 1000.499 would both be 1000pts. Only in the case of a tie would the numbers after the decimal place be considered.

In exceptional and limited circumstances WPA shall be entitled to permit the grouping of Sport Classes that do not satisfy the Classification Hierarchy Table(s) in Appendix 2.

COMMENT: The changes made to the Classification Rules and Regulations in relation to the new Sport Classes T61-64, have been reflected in the Classification Hierarchy Table(s) in Appendix 2.

Rule 10: Surveying and Measurements

(Rule 148)

1. The accuracy of the markings and installations for athletics facilities under Rule 3 and Rule 11.2 shall be checked by an appropriately qualified surveyor who shall furnish appropriate certificates together with details of any check measurements made to the relevant

body and/or the facility owner or operator. He shall be given full access to stadium plans and drawings and the latest measurement report for the purpose of this verification.

2. For Track and Field Events in IPC Games and IPC Competitions (see Part B - 3.1.2 (a) and (b)) all measurements shall be made with a calibrated certified steel tape or bar or with a scientific measuring device. The steel tape, bar or scientific measuring device shall be manufactured and calibrated according to international standards. The accuracy of the measuring equipment used in the competition shall have been verified by an appropriate organisation accredited by the national measurement authority.

   Other than at IPC Games and IPC Competitions (see Part B - 3.1.2 (a) and (b)) fiberglass tapes may also be used.

   Note: Concerning acceptance of World and/or Regional Records, see Rule 51.19.a.

COMMENT: It should be noted that when the electronic measurement equipment is obviously not working properly all measurements need to be made using a calibrated steel tape or bar.

Rule 11: Validity of Performances

(Rule 149)

1. No performance accomplished by an athlete will be valid unless it is accomplished at a WPA Recognised Competition (see Part B - 3.1.2).

2. Performances in events normally conducted in the stadium, made outside traditional athletics facilities (such as those held on a temporary facility in town squares, other sporting facilities, beaches, etc.) or on a temporary facility built within a stadium shall be valid and recognised for all purposes, if they are made subject to all of the following conditions:

   a) the relevant governing body as provided in Part B – 3. has issued a permit for the event;
   b) a qualified panel of National Technical Officials are appointed to and officiate at the event;
   c) where applicable, equipment and implements in conformity with the Rules are used; and
   d) the event is conducted in a competition area or facility in conformity with the Rules and in respect of which a survey has been made in accordance with Rule 10 on the day of the event.

COMMENT: When a competition described in under Rule 11.2 is held over more than one day, the survey should be made on the day of the first event. In either case if the surveyor can be satisfied that there will be no movement of or alteration to the facilities being surveyed, the survey may be completed up to two days prior to the day of the first event.

3. Performances in events conducted indoors or in an otherwise fully or partly covered venue where the length or other specifications of the facility do not comply with the rules for indoor competition shall be valid and recognised as if they were achieved outdoors, if they are made subject to all of the following conditions:
   a) the relevant governing body as provided in Part B – 3. has issued a permit for the event;
   b) a qualified panel of National Technical Officials are appointed to and officiate at the event;
   c) where applicable, equipment and implements in conformity with the Rules are used;
   d) in the case of an oval track, its length is greater than 201.2m (220 yards) but no greater than 400m; and
   e) the event is conducted in a competition area or facility in conformity with the Rules and in respect of which, if held on a temporary facility, a survey has been made in accordance with Rule 10.

   COMMENT: When a result is achieved on a complying facility with no advantage gained and all related rules observed, the fact that it happened at a covered competition site does not prevent a result being listed among the outdoor equivalent distances and used for any statistical purpose (performances e.g. on covered 400m tracks and straights).

Rule 12: Video Recording

(Rule 150)

In IPC Games and IPC Competitions (see Part B - 3.1.2 (a) and (b)) and, whenever possible, in other competitions, an official video recording of all events to the satisfaction of the Technical Delegate(s) shall be made. It should be sufficient to demonstrate the accuracy of performances and any violation of the Rules, including the WPA Classification Rules and Regulations.

COMMENT: The appointment at any competition of a video Referee will significantly affect the

practical oversight of many aspects of those competitions at which sufficient video collection and replay systems are available. The video Referee will generally be able to act proactively in respect of the track events (e.g., the start, running inside the lane line around the curve, jostling and obstruction, breaking from lanes too early, relay changeovers). If the amount of cameras and equipment is sufficient to play a similar role for some or all of the field events, he can undertake a similar role, but usually in a more reactive fashion when the on-field Referee requests further examination or review of a specific incident. In the case of the Track Events, the Video Referee will observe the races on one or more screens in the video room and then based on either his own observations or upon referral from a Referee or Chief Umpire in the competition area, examine one or more particular issues by looking at any replayed footage that might be available. If it is clear as a result that there has been an infringement of the Rules, then he should take the appropriate decision and convey it to the Track Referee and the Chief Photo Finish Judge. Similarly, if an umpire or trackside Referee has reported a potential infringement, it should be checked by the video Referee and the appropriate advice provided and decision taken. In addition, official video footage will as in the past continue to be used to assist in dealing with protests and appeals. It is becoming common for experienced companies to provide an existing service for competitions rather than the LOC setting up their own. However, either option can be used.

Rule 13: Scoring

(Rule 151)

In a match where the result is to be determined by the scoring of points, the method of scoring shall be set out in the entry and eligibility documentation.

Rule 14: Wheelchair and Frame Running Requirements

(Sport Classes T32-34, T51-54 and T71-72)

1. General Wheelchair Requirements:

   a) At all WPA Recognised Competitions (see Part B - 3.1.2) the wheelchair shall have two (2) large rear wheels and one (1) small front wheel.

   b) All wheelchairs must have a functional braking system for safety purposes.

   c) No mechanical gears or levers are allowed for the purpose of propelling the wheelchair.

   d) The use of mirrors is not permitted in wheelchair track or road races.

   e) In all races the athlete must be able to turn the front wheel(s) manually left and right for steering purposes. Only hand operated mechanical steering devices are allowed.

   f) The use of fairings or similar devices for the purpose of improving aerodynamic performance is not permitted.

   g) No element of the wheelchair or its attachments or accessories may incorporate energy storing capacity (e.g., elasticity) for the purpose of enhancing performance.

   h) Devices attached to the wheelchair or athlete shall comply with Rule 7.4d (assistance) and shall not have the capability to communicate except to the athlete.

   Note: Unless approved by WPA and the Technical Delegate, no devices with transmission function for the purpose of event presentation or broadcasting shall be permitted at WPA Recognised Competitions.

2. Wheelchair Frame Requirements:

   a) No part of the frame of the wheelchair, or any attachments to it, shall extend forward beyond the hub of the front wheel nor backwards beyond the rearmost vertical plane of the rear wheels (including tyres). Additionally, the width of the frame, and any of its attachments, shall not be wider than the inclined plane of the pushing rims (as outlined in Figure 4).

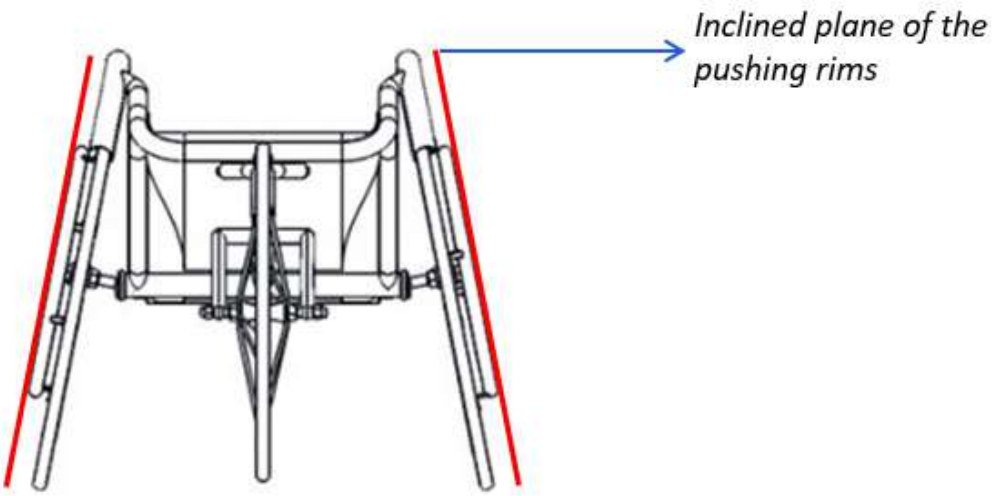

Figure 4 – Inclined plane of the pushing rims

COMMENT: Call Room Judges will inspect all wheelchairs to ensure no attachments are outside of the inclined plane of the pushing rims.

b) The maximum height from the ground to the bottom of the wheelchair frame shall be 50 cm.

c) The frame structure must be made of a material which provides sufficient stability and stiffness for safety purposes.

d) For the purpose of seat positioning, the frame structure shall incorporate a seat.

e) The use of Sideguards may be added to protect the athlete from the wheels and shall be in compliance with Rule 14.2 (a).

3. Wheel and Push-rim Requirements:

a) The maximum diameter of the large wheel including the inflated tyre shall not exceed 70 cm.

b) The maximum diameter of the small wheel including the inflated tyre shall not exceed 50 cm.

c) Only one plain, round, push-rim is allowed for each large wheel.

Note (i): This rule also applies for persons requiring a single arm drive wheelchair.

Note (ii): For T32/33/51/52 athletes who may experience a limitation in their ability to stabilise the wrist during pushing, a modification shall be allowed so that a push-rim and wheel disk may be fused together and incorporated into the racing wheel. No other modification that would defeat the general intent of Rule 14.3 is allowed.

Note (iii): No part of the athlete's body shall be strapped to the push-rim or to the wheel.
Note (iv): All athletes competing in racing wheelchairs must only propel their racing chair through the pushing action exerted by the athletes' arm(s). The lower extremities (legs and feet), or any relevant prosthesis, are not permitted to touch the ground so as to propel the racing chair or stabilise it at the start.

4. Wheelchairs will be measured and inspected in the Call Room and once inspected shall not be taken from the competition area before the start of the event. Wheelchairs may be re-examined by the relevant Referee or other officials before or after the event on or off the field of play.
5. It is the responsibility of athletes to ensure that their wheelchair conforms to the requirements stipulated above. No event shall be delayed while an athlete makes adjustments to their wheelchair. If an athlete fails to comply with this Rule, then the athlete will not be permitted to start the event and shall be shown in the results as "DNS" in accordance with Rule 6.16.
6. If the Relevant Referee believes that a wheelchair and/or the athlete using it represent a safety risk they shall be authorised to exclude the athlete and/or wheelchair from an event.

   Note: For safety, athletes should secure their lower limb(s) so they don't fall to the ground and cause injury.

COMMENT: It is important to note that there can be no devices attached to the wheelchair that can communicate or anything that gives the athlete any unfair advantage over other athletes in the event.

Wheelchairs are measured and inspected in the Call Room, however for major competitions such as World Championships, Paralympic Games and Regional Games a courtesy pre-check of the racing wheelchairs for conformity should be conducted, including a check against the relevant advertising regulations of the competition.

What to look for when checking a wheelchair for conformance to current requirements.

It is advisable to use a stick or metre stick with marks at 50cm and 70cm as these are the two key dimensions of importance.

Measure the wheel diameter by placing the "0" end of the measuring stick on the ground beside the wheel and measure parallel to the wheel. The diameter of the smaller wheel must not exceed 50cm while the diameter of the larger wheel(s) must not exceed 70cm. If the tyres are not inflated, they can still be checked, but advice given to the athlete or coach could include that it has not yet passed pre-check but will be checked again in the Call Room in any event.

The same measuring stick can be used to ensure that the maximum height from the ground to the bottom of the wheelchair does not exceed a height of 50cm.

While there is no issue with the overall length of the wheelchair, no part may extend beyond the wheel(s) in the front or rear of the wheels. The best way to measure for this is to move the chair to a wall. Wheel the chair backwards toward the wall; if the tyres touch the wall rather than the seating frame, then the chair is acceptable.

The chair may also have other requirements, such as having a braking system and steering capacity which also need to be checked at the pre-check.

Call Room Judges shall ensure that the racing wheelchair does not have any device on it which can "communicate" to anyone, other than the athlete, in accordance with Rule 14.1 (h).

Regardless of whether a wheelchair is checked as part of a pre-check, it must be checked in the Call Room and with the athlete in the chair.

It should be noted that ITOs as well as other Technical Officials involved in a pre-check of wheelchairs need to be completely familiar with this rule as well as the requirement to check the wheelchairs in the Call Room.

COMMENT: At competitions without a warm-up track or where the warm-up track is either not available or not of the same radius of the competition track, the Technical Delegate may consider permitting a single warm-up lap (It may not be a complete lap) for athletes in classes T32-34 and T51-T54 competing in 200m races and above to set their wheelchair compensators, provided that this does not create conflicts or significantly impact the competition schedule.

Frame Running Requirements

(Sport Classes T71-72)

7. General Frame Running Requirements:

   a) At all WPA Recognised Competitions (see Part B - 3.1.2) the Running frame shall have a support saddle, a body support plate, handlebars, two (2) rear wheels and one (1) front wheel.

   b) All Running frames must have a functional braking system for safety purposes.

   c) No mechanical gears or levers are allowed for the purpose of propelling the Running frame.

   d) The use of mirrors is not permitted in Frame Running events.

   e) In all races the athlete must be able to turn the front wheel left and right for steering purposes. Only hand operated mechanical steering handlebars are allowed.

   f) The use of fairings or similar devices for the purpose of improving aerodynamic performance of the athlete is not permitted.

   g) No element of the Running frame or its attachments accessories may incorporate energy storing capacity (e.g., elasticity) for the purpose of enhancing performance.

   h) Devices attached to the Running frame or athlete shall comply with Rule 7.4 (d) (assistance) and shall not have the capability to communicate except to the athlete.

Note: Unless approved by WPA and the Technical Delegate, no devices with transmission function for the purpose of event presentation or broadcasting shall be permitted at WPA Recognised Competition.

8. Running Frame Requirements:

   a) No part of the Running frame, or any attachments to it, shall extend forward beyond the hub of the front wheel nor backwards beyond the rearmost vertical plane of the rear wheels (including tyres). Additionally, the width of the frame, and any of its attachments, shall not be wider than the length between the rear wheel hubs, excluding the rear wheels.

   b) The maximum length of the Running frame shall be 200cm, and the maximum width

shall be 95cm including the tyres.

c) The Frame structure must be made of a material which provides sufficient stability and stiffness for safety purposes.

d) For the purpose of seat positioning, the Frame structure shall incorporate a saddle.

e) Note: The saddle may have other shapes than the traditional type of race cycling saddle.

f) For the purpose of athlete's stability, the frame structure shall incorporate a Body support plate.

Note: For safety, the athlete may be strapped to the body support plate with a belt or an orthopaedic brace, to prevent the athlete from falling to the ground and causing injury. Hands may also be strapped to the handlebar.

9. Wheel Requirements:

   a) The maximum diameter of all wheels including the inflated tyre shall not exceed 72 cm.

   b) The rear wheels may incorporate a wheel guard on the inside only.

10. The Running frame shall comply with Rule 14.4 and Rule 14.6 for measurement and inspection purposes.

11. It is the responsibility of the athlete to ensure that their Running frame conforms to the requirements stipulated above. No event shall be delayed while adjustments to a Running frame are being done. If an athlete fails to comply with this Rule, then the athlete will not be permitted to start the event and shall be shown in the results as "DNS" in accordance with Rule 6.16.

12. For all athletes competing in Frame Running Events T71-72, they shall propel their Running frame with their feet and can do so forwards or backwards;

SECTION III – TRACK EVENTS

Rule 15: Track Measurements

(Rule 160)

1. The length of a standard running track shall be 400m. It shall consist of two parallel straights and two bends whose radii shall be equal.

   The inside of the track shall be bordered by a kerb of suitable material that should be coloured white, with a height of 50mm to 65mm and a width of 50mm to 250mm. The kerb on the two straights may be omitted and a white line 50mm wide substituted.

   If a section of the kerb on a bend has to be temporarily removed for field events, its place shall be marked with a white line 50mm in width and by cones or flags, minimum height 0.15m, placed on the white line so that the edge of the base of the cone or flag pole coincides with the edge of the white line closest to the track, and placed at intervals not exceeding 4m. (Flags shall be placed at an angle of 60° with the ground away from the track). This shall also apply to the outer half of the track in the case of starts for distance races where the field is started in two groups under Rule 17.11 and optionally to the straights, in this latter case, at intervals not exceeding 10m.

   Note: All points at which the track changes from a curve to a straight or a straight to a curve shall be marked, in a distinctive colour 50mm x 50mm on the white line by the surveyor and a cone placed at such points during a race.

2. The measurement must be taken 0.3m outward from the kerb or, where no kerb exists on a bend, 0.2m from the line marking the inside of the track.

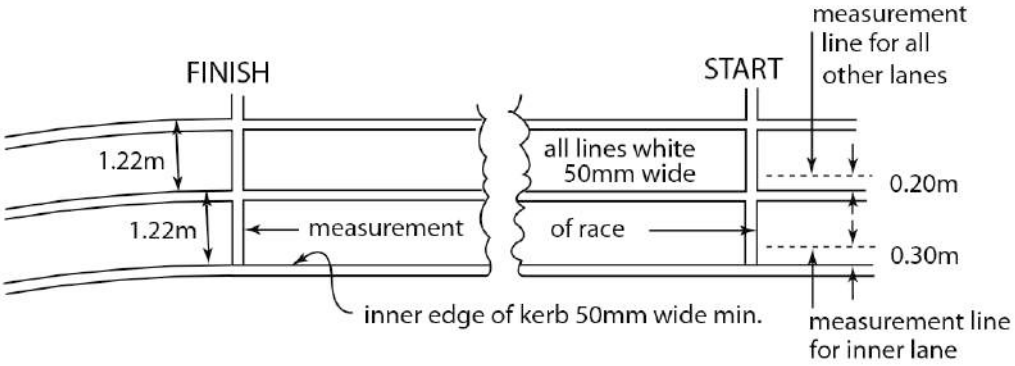

Figure 5 – Track Measurements (infield view)

3. The distance of the race shall be measured from the edge of the start line farther from the finish to the edge of the finish line nearer to the start.

4. In all races up to and including 400m, each athlete shall have a separate lane, with a width of 1.22m ± 0.01m, including the lane line on the right, marked by white lines 50mm in width. All lanes shall be of the same nominal width. The inner lane shall be measured as stated in Rule 15.2, but the remaining lanes shall be measured 0.2m from the outer edges of the lines.

   Note: For all tracks constructed before 1 January 2004 for all such races, the lane may have a width of maximum 1.25m. However, when such a track is fully resurfaced, the lane width shall comply with this Rule.

5. In IPC Games and IPC Competitions (see Part B - 3.1.2 (a) and (b)) the track should allow for eight lanes minimum.

6. The lateral inclination of tracks towards the inside edge should not exceed 1:100 (1%) unless special circumstances exist which justify World Athletics providing an exemption, and the overall downward inclination in the running direction should not exceed 1:1000 (0.1%) between any start and finish line.

   Note: It is recommended that, for new tracks, the lateral inclination should be towards the inside lane.

7. Full technical information on track construction, layout and marking is contained in the World Athletics Track and Field Facilities Manual. This Rule gives basic principles only,

which must be followed.

COMMENT: It should be noted that only tracks in accordance with the World Athletics Track and Field Facilities Manual should be used for World Championships and Paralympic Games.

Rule 16: Starting Blocks

(Rule 161)

1. Starting blocks may be used for sport classes T71-72 (Frame Running), T35-38, T42-47 and T61-64 in all races up to and including 400m (including the first leg of ambulant relay races of 4x100m, 4x200m and 4x400m) but shall not be used for any other race. Starting Blocks must be used for sport classes T11-13 and T20 in all races up to and including 400m (including the first leg of universal relay races). When in position on the track, no part of the starting block shall overlap the start line or extend into another lane, with the exception that, provided there is no obstruction to any other athlete, the rear part of the frame may extend beyond the outer lane line.
2. Starting blocks shall comply with the following general specifications:
   a) The starting blocks shall consist of two foot plates, against which the athlete's feet are pressed in the starting position and which shall be mounted on a rigid frame. They shall be entirely rigid in construction and shall give no unfair advantage to the athlete. The frame shall in no way obstruct the athlete's feet as they leave the blocks.
   b) The foot plates shall be sloped to suit the starting position of the athlete and may be flat or slightly concave. The surface of the foot plates shall accommodate the spikes in the athlete's shoes, either by using slots or recesses in the face of the foot plate or by covering the surface of the foot plate with suitable material permitting the use of spiked shoes.
   c) The mounting of the foot plates on the frame may be adjustable, but it shall allow no movement during the actual start. In all cases, the foot plates shall be adjustable forward or backward in relation to each other. The adjustments shall be secured by firm clamps or a locking mechanism, which can be easily and quickly operated by the athlete.
   d) They shall be fixed to the track by a number of pins or spikes, arranged to cause the

minimum possible damage to the track. The arrangement shall permit the starting blocks to be quickly and easily removed. The number, thickness and length of pins or spikes depend on the track construction. The anchorage shall permit no movement during the actual start.

e) When an athlete uses his own starting blocks, they shall comply with the above general description but otherwise may be of any design or construction, provided that they do not interfere with other athletes.

Note: It is not a requirement for athletes in Sport Classes T35-38, T42-44 and T61-64 to use both foot plates when using a starting block.

COMMENT: This Rule should also be interpreted so that:

a) No part of the frame or footplates can overlap a starting line;

b) The frame only (but not any part of the footplate) can extend into the outer lane provided there is no obstruction. This reflects the long-standing practice of athletes at the start of races on a bend placing their blocks at an angle to run the most direct line after the start. The use of lights, by deaf or hearing impaired athletes only, at the start of races is allowed and is not considered assistance. It should however be the obligation of the athlete or his team for the financing and supply of such equipment and its compatibility with the start system in use, unless at a particular meeting where there is an appointed technical partner who can provide it.

3. In IPC Games and IPC Competitions (see Part B - 3.1.2 (a) and (b)), performances submitted for ratification as a World/Regional Record for Sport Classes T11-13 and T20 shall require that the starting blocks be linked to a World Athletics approved Start Information System. The Start Information system shall not be activated for any other classes, even if the athlete uses blocks.

4. The LOC may insist that only starting blocks provided by them may be used.

Note (i): Some athletes in Sports Classes T20, T71-72 (Frame Running), T35-38, T42-47and T61-64 may require their starting blocks to be set for them by the Starter's Assistant. Upon request, the Technical Delegate will provide the appropriate athletes and/or their team coach with a document on which they will be able to indicate their requirements (as per Rule 7.13).

Note (ii): Use of personal starting blocks shall require approval from the Technical Delegate.

COMMENT: It should be noted that the only classes of athletes who must use starting blocks are T11-13 and T20. For other classes they have the options of using starting blocks or other approved starting devices.

There are some classes of athlete most notably amputees who require assistance in the form of a single block, two separate single blocks or two regular starting block rigid frames with one block on each frame. This would normally be approved by the Technical Delegate prior to the competition through the completion of a specific Request for Assistance form. In all cases, modifications of starting blocks shall not provide any additional advantage and must conform to the principles espoused in Part B – 7 of these rules.

Rule 17: The Start

(Rule 162)

Note: Unless otherwise stated, in relation to athletes in Sport Classes T11 and T12, any reference under this rule to "athlete" shall be interpreted as referring to both the athlete(s) and/or their guide-runner(s). In the event of a breach of a rule being committed by a guide-runner resulting in a warning or disqualification then the accompanying athlete shall consequently be warned or disqualified.

1. The position of the start of a race shall be denoted by a white line 50mm wide. In all races not run in lanes the start line shall be curved, so that all the athletes start the same distance from the finish. Starting positions in events at all distances shall be numbered from left to right, facing the direction of running.

   Note (i): The 1500m start line, or any other curved start line, may be extended out from the outside bend lane to the extent that the same synthetic surface is available.

   In all races of Sport Classes T11-13 and T20 up to and including 400m (including the first leg of ambulant relay races of 4x100m, 4x200m, 4x400m and the 4x100m universal relay), a crouch start and the use of starting blocks are compulsory.

   Note (ii): A crouch start stance is not required by athletes in Sport Classes T35-38, T42-47 and T61-64

COMMENT: It is anticipated that, in order to efficiently complete the start procedures and for larger meetings to appropriately introduce the competitors in the race the athletes, when assembled, should be positioned facing in the direction of the race.

2. All races shall normally be started by the report of the Starter's gun fired upwards after he has ascertained that athletes are steady and in the correct starting position.

   If, for any reason, the Starter is not satisfied that all is ready for the start to proceed after the athletes are on their marks, he shall order all athletes to withdraw from their marks and the Starter's Assistants shall place them on the assembly line again.

   Note: If an athlete has a hearing impairment the starter or his assistant may use a flag, a strobe light or other visual device as well as a pistol to signal the start. In some circumstances, for athletes with both a vision and a hearing impairment, an official may touch an athlete to signal the start.

COMMENT: The Starter must not initiate the start procedures before he is sure that the relevant timing team is ready as well as the Judges at the finish and in races up to and including 200m, the Wind Gauge Operator. The communication process between the start and the finish area and the timing team varies according to the level of the competition. At IPC Games and IPC Competitions (see Part B - 3.1.2 (a) and (b)) and many other high-level meetings there is invariably a service company responsible for the electronic timing and the Start Information System. In this case, there will be technicians who are responsible for communication. In other competitions a variety of communication systems are used – radios, phones, or by using flags or flashing lights.

3. The commands of the Starter must be in English only. For all races up to and including 400m (including ambulant relay races of 4x100m, 4x200m, 4x400m and the 4x100m universal relay) the command will be "On your marks" and then "Set". When all athletes are "Set", the gun shall be fired. An athlete shall not touch either the start line or the ground in front of it with his hands or his feet when on his marks. In races longer than 400m, the command will be "On your marks" and when all athletes are steady, the gun will be fired. In races longer than 400m athletes shall not touch the ground with their hand or hands during the start.

4. In races up to and including 400m after the "On your marks" command, an athlete shall approach the start line, assume a position completely within his allocated lane and behind

the start line. For Sport Classes T11-13 and T20, both hands and at least one knee shall be in contact with the ground and both feet in contact with the foot plates of the starting blocks. At the "Set" command, an athlete shall immediately rise to his final starting position retaining the contact of the hands with the ground and of the feet with the foot plates of the blocks.

In case of wheelchair races (classes T33-34 and T51-54), including Frame Running Events (classes T71-72) the following commands and positions are required. After the 'On Your marks' command, an athlete shall approach the start line, assume a position entirely within his allocated lane and behind the start line. At the 'Set' command, an athlete should immediately take up his final starting position retaining the contact of the front wheel with the ground behind the line".

COMMENT: In all races using crouch start, including wheelchair races and Frame Running events, as soon as athletes are steady in their blocks or behind the line respectively, the Starter shall raise his arm in which he holds the gun, then he shall say "Set". He shall wait then for all the athletes to be steady and shall then fire the gun.

The Starter must not raise his arm too early, especially when manual Timekeepers are being used. He is advised to raise his arm only when he feels he is about to give the command "Set". There is no rule that enables to determine the time that elapses between the commands "On your marks" and "Set" on one hand, and on the other hand, between the command "Set" and the gun shot. The Starter shall let the athletes go once they are all motionless in the correct starting position. Which means that he may have, for certain starts, to fire the gun quite quickly, but on the other hand, he may also have to wait longer in order to make sure that they are all steady in their starting position.

5. On the command "Set" for races up to 400m and "On your marks" for longer races all athletes shall at once and without delay assume their full and final set position.

   Where an athlete in the judgment of the Starter,

   a) After the command "Set" for races up to 400m and "On your marks" for longer races, and before the report of the gun, causes the start to be aborted, for instance by raising a hand and/or standing or sitting up in the case of a crouch start, without a valid reason, (such reason to be evaluated by the relevant Referee), or;

   b) Fails to comply with the commands "On your marks" or "Set" as appropriate, or does not

place himself in his final starting position after a reasonable time, or;

c) After the command "On your marks" or "Set" disturbs other athletes in the race through sound, movement or otherwise, the Starter shall abort the start.

The Referee may warn the athlete for improper conduct in relation to the required start procedure and may disqualify an athlete in case of a second infringement of this Rule during the same competition.

However, when an extraneous reason was considered to be the cause for aborting the start, or the Referee does not agree with the Starter's decision, a green card shall be shown to all the athletes to indicate that a false start was not committed by any athlete.

COMMENT: The division of the start Rules into disciplinary matters (under Rule 17.2 and Rule 17.5) and false starts (Rules 17.7) ensures that the whole field was not penalised for the actions of a single athlete. It is important in order to maintain the integrity of the intention of this division and that Starters and Referees are as diligent in the application of Rule 17.2 and Rule 17.5 as well as in detecting false starts. Such conduct, whether wilful or unintentional perhaps through nervousness should cause Rule 17.2 and Rule 17.5 to be applied although where the Starter is of the view that it was unintentional, the application of Rule 17.2 only may be appropriate.

Conversely, there will be instances in which an athlete is entitled to request a delay of the start for legitimate reasons. It is therefore vital that the Start Referee (in particular) pays attention to the environment and conditions surrounding the start, especially in relation to factors of which the Starter may not be aware because he is focussing on preparing himself for the start and/or wearing headphones. In all such cases the Starter and Referee must act reasonably and efficiently and clearly indicate their decisions. If appropriate the reasons for the decisions can be announced to the athletes in the race and if possible or desirable also to the announcers, television team etc. through the communication network.

A green card shall not be shown in any case when a yellow or red card has been issued.

Note: It is acceptable for arm amputee athletes or those with short arms to use pads on which to rest stumps at the start or to improve balance. Pads must be completely behind the start line and not interfere with any other athlete. The pads should be a similar colour to the track or of a neutral colour.

COMMENT: This is always difficult to deal with, the colour of the pads that arm amputee athletes use. It is recommended that tape the same colour of the track be available in the Call Room to modify any pads which do not conform to this requirement.

6. In wheelchair and Frame Running races of 800m or longer the Starter has the authority to recall a race for a restart (but is not obliged to do so) if a collision involving any athletes in the race occurs in the first 50m. This does not reduce or remove the authority of the Referee to take appropriate action on reports received from Umpires during this portion of the race.

False Start

7. An athlete, after assuming a full and final starting position, shall not commence his start until after receiving the report of the gun. If, in the judgment of the Starter or Recallers, he does so any earlier, it shall be deemed a false start.

   When a World Athletics approved Start Information System is in use, the Starter and/or an assigned Recaller shall wear headphones in order to clearly hear the acoustic signal emitted when the System indicates a possible false start (i.e. when reaction time is less than 0.100 second). As soon as the Starter and/or an assigned Recaller hears the acoustic signal, and if the gun was fired, there shall be a recall and the Starter shall immediately examine the reaction times and any other available information from the Start Information System in order to confirm which, if any, athlete(s) is/are responsible for the recall.

   For the purposes of this Rule, the 'commencement of the start' is defined as follows:

   a) For those relevant Sport Classes where a crouch start is compulsory or optional (and the athlete elects to employ a crouch start) (see Rule 17.1 Note (ii) and Note (iii)), the commencement of the start is defined as any motion by an athlete that includes or results in one or both feet or lower limb prosthetic device(s) losing contact with the foot plate(s) of the starting blocks (or where starting blocks are not used, the ground), or one or both hands, stump(s), short arm(s) or upper limb prosthetic device(s) losing contact with the ground (or, if applicable, pads); and

   b) In the case of a standing start, the commencement of the start is defined as any motion that results in one or both feet or lower limb prosthetic device(s) losing

contact with the ground.

If the Starter determines that prior to receiving the report of the gun, an athlete initiated a movement that was not stopped and continued into the commencement of his start (as defined above), it shall also be a false start.

Note (i): When a World Athletics certified Start Information System is in operation, the evidence of this equipment shall be used as a resource by the relevant officials to assist in making a correct decision.

Note (ii): Any other motion by an athlete shall not be considered to be the commencement of the start. Such instances may, if applicable, be subject to a disciplinary warning or disqualification.

Note (iii): As athletes starting races in a standing position are more prone to over-balance, if such a movement is considered to be accidental, the start should be regarded as "unsteady". If an athlete is pushed or jostled over the line before the start, he should not be penalised. Any athlete causing such interference may be subject to a disciplinary warning or disqualification.

COMMENT: Generally, no false start should be charged if the athlete has not lost contact with the ground or foot plates. For example, if an athlete moves his hips up, but then moves them down without his hands or feet losing contact with the ground or foot plates at any time, it should not result in a false start. It may be a reason to warn (or disqualify if there has been a previous warning) the athlete for improper conduct under Rule 17.5 However in cases of a "rolling start" where the Starter (or Recaller) is of the opinion that an athlete has effectively anticipated the start through some continuous movement even if he did not move his hands or feet before the gun sounded, the race should be recalled. This can be done by a Starter or Recaller but it will be the Starter who is in the best situation to judge such a case as only he will know the position of his finger on the gun trigger when the athlete began his movement. In these cases where the Starter is sure that the athlete's movement began before the report of the gun, a false start should be awarded. In accordance with Note (iii) Starters and Referees should avoid being over-zealous in the application of Rule 17.7 to those events started from a standing position. Such instances are rare and usually occur unintentionally as it is easier to overbalance from a two-point start or a three-point start. It is not intended that same should be unduly penalised. If such a movement was considered to be accidental, Starters and Referees are

encouraged to first consider calling the start "unsteady" and proceed according to Rule 17.2. However repeat practices during the same event may entitle the Starter and/or Referee to consider applying either the false start or disciplinary procedures, as might best be applicable in the situation.

Note (iv): In practice, when one or more athletes make a false start, others are inclined to follow and, strictly speaking, any athlete who does so has also made a false start. The Starter should warn or disqualify only such athlete or athletes who, in his opinion, were responsible for the false start. This may result in more than one athlete being warned or disqualified. If the false start is not due to any athlete, no warnings shall be given, and a green card shall be shown to all the athletes.

8. Any athlete responsible for a false start shall be disqualified by the Starter.

9. In case of a false start, the Starter's Assistants shall proceed as follows:

   The athlete(s) responsible for the false start shall be disqualified and a red and black card (diagonally halved) shall be raised in front of him.

   If lane markers that provide for it are being used, then whenever a card is shown to the athlete(s) responsible for the false start, the corresponding indication should be shown on the lane marker(s).

COMMENT: While it is the Starter who is responsible for disqualifying the athlete, the Starter's Assistant is the one to show the disqualification card to the athlete. If the athlete gives an immediate oral protest the Starter's Assistant would normally call the Start Referee over to discuss the situation with the athlete and make a decision as to allow or disallow the athlete to continue "under protest".

Note: The reason for the diagonally halved cards was to provide a distinction between cards given for this purpose and those (the traditional all yellow or all red) cards given for disciplinary reasons – as each of these can be used in the start area. With this difference the reason for the card should be clearer both to the athletes as well as those observing the start, particularly those in need of immediate information, such as the announcer or television or radio commentators. It is recommended that the size of the diagonally halved cards be A5 and that they be double sided. Note that the corresponding indication on the lane markers may remain yellow and red as previously, in order to avoid unnecessary expense in modifying existing equipment.

10. The Starter or any Recall Starter, who is of the opinion that the start was not a fair one, for whatever reason, shall recall the athletes by firing a gun or activating a suitable audible signal.

COMMENT: The reference to a fair start does not relate solely to cases of a false start. This rule should also be interpreted as applying to other situations such as blocks slipping, a foreign object interfering with one or more athletes during a start etc.

5000m and 10,000m

11. When there are more than 12 people including athletes and their guide-runner(s) in a distance race, they may be divided into two groups for the purpose of the start. One group comprising approximately two thirds of the field shall be placed on the regular arced start line and the second group on a separate arced start line marked across the outer half of the track. The outer group shall run as far as the end of the first bend on the outer half of the track, which shall be marked by cones or flags. The separate arced start line shall be positioned in such a way that all the athletes shall run the same distance. Any athlete in the second group who fails to keep within the marked outer lanes during such a start will be disqualified on the same grounds as any athlete who runs out of his lane.

    The break line for an 800m race indicates where the athletes in the second/outer group may join the athletes using the regular start in races which start at the normal (home straight) start finish line. For races that start in the back straight (200m start position) the track shall be marked at the beginning of the finish straight for group starts to indicate where athletes starting in the second/outer group may join the athletes using the regular start. This mark may be a 50mmx50mm mark on the line between lanes 4 and 5 (lanes 3 and 4 in a six-lane track) immediately before which a cone or flag is placed until the two groups converge.

Rule 18: The Race

(Rule 163)

1. In races including at least one bend, the direction of running shall be left-hand inside. The lanes shall be numbered with the left-hand inside lane numbered 1.

COMMENT: Where conditions permit and the track is properly surveyed, straight events can be conducted in the opposite direction, i.e., right-hand inside.

Obstruction

2. If an athlete or the athlete's guide-runner is jostled or obstructed during an event so as to impede his progress:

   a) If the jostling or obstruction is considered unintentional or is caused otherwise than by an athlete or their guide-runner, the Referee may, if he is of the opinion that an athlete (or his team) was seriously affected in accordance with Rule 2.13.7, order that the race (for one, some or all of the athletes) be re-held or allow the affected athlete (or team) to compete in a subsequent round of the event;

   b) If another athlete or his guide-runner is found responsible for the intentional jostling or obstruction by the Referee, such athlete or his team shall be liable to disqualification from that event. The Referee may, if he is of the opinion that an athlete was seriously affected in accordance with Rule 2.13.7, order that the race (for one, some or all of the athletes) be re-held excluding any disqualified athlete or team or allow any affected athlete (or team) (other than any disqualified athlete or team) to compete in a subsequent round of the event.

   In order for (a) and (b) to apply, the Referee must deem that the athlete (or team) affected (or whose guide-runner was affected) by the jostling or obstruction would likely have completed the race were it not for the jostling or obstruction.

   COMMENT: For the purposes of these Rules, "jostling" shall mean an athlete or guide-runner making physical contact on one or more occasions with another athlete or guide-runner.

3. During wheelchair races propulsion by any other method except the athlete pushing on the wheels or push-rims will result in disqualification.

4. During wheelchair and Frame Running races an athlete coming from behind in an attempt to overtake carries the responsibility of ensuring full clearance of the chair being overtaken before cutting across. The athlete being overtaken has the responsibility not to obstruct or impede the incoming athlete once the front wheel(s) of the athlete are in sight.

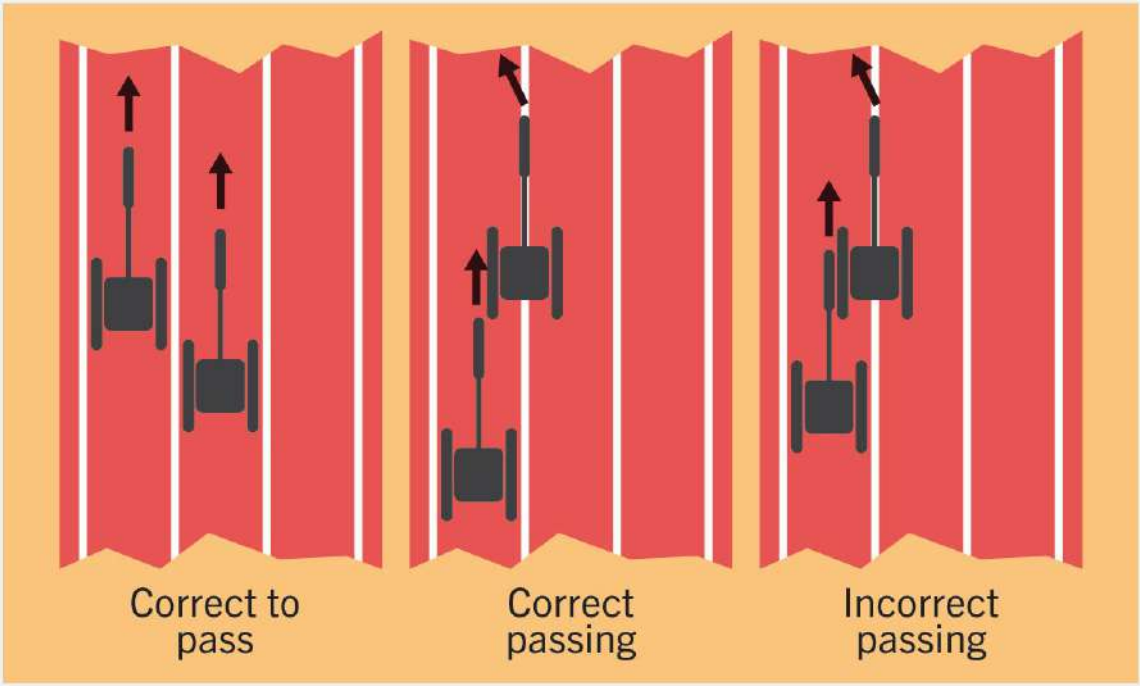

Figure 6 – Wheelchair overtaking

Lane Infringement

5.

a) In all races run in lanes, each athlete or the athlete's guide-runner shall keep within his allocated lane from start to finish. This shall also apply to any portion of a race where there is a requirement to run in lanes.

b) In all races (or any part of races) not run in lanes, an athlete or the athlete's guide-runner running on a bend, on the outer half of the track as per Rule 17.11, shall not step, run or wheel on or inside the kerb or line marking the applicable border (the inside of the track or the outer half of the track).

Except as stated in Rule 18.6, if the Referee is satisfied, on the report of a Judge or Umpire or otherwise, that an athlete or the athlete's guide-runner has infringed this Rule, they or in the case of a relay race, their team shall be disqualified.

6. An athlete or the athlete's guide-runner or in the case of a relay race, his team, shall not be disqualified for running or wheeling out of his lane if he:

a) is pushed or forced by another person or object to step, run or wheel outside his lane or

on or inside the kerb or line marking the applicable border, or;

b) steps, runs or wheels outside his lane in the straight or outside the outer line of his lane on the bend,

c) in all races run in lanes, touches once the line on their left, or the kerb or line marking the applicable border (as defined in Rule 17.5(b)) on a bend; provided that:

In the case of wheelchair races, the duration for which the wheel of the racing chair making contact with the line remains in contact with the line does not exceed the time that it takes the athlete to make [two] further pushes on the push-rim of the racing chair from the point at which the wheel of the racing chair first made contact with the line ; and

In the case of Frame Running races, the duration for which the wheel of the Frame Runner making contact with the line remains in contact with the line does not exceed the time that it takes the athlete to make [two] further steps from the point at which the wheel of the Frame Runner first made contact with the line.

d) in all races (or any part of races) not run in lanes, steps/wheels once on or completely over the kerb or line marking the applicable border (as defined in Rule 17.5(b)) on a bend.

and no material advantage is gained and no other athlete being jostled or obstructed so as to impede the other athlete's progress (see Rule 18.2). If material advantage is gained, the athlete (or team) shall be disqualified.

In races with multiple rounds, an infringement defined in Rules 18.6.(c) and 18.6.(d) may be made only once during all rounds of an event by a particular athlete without the disqualification of that athlete. A second infringement will result in the disqualification of that athlete whether it was made in the same round or in another round of the same event.

In the case of Relay Races, any second step (as described in this Rule 18.6.(c) and 18.6.(d) by an athlete who is a member of a team, regardless of whether committed by the same or different athletes, will result in the disqualification of the team whether it happens in the same round or in another round of the same event.

For the ratification of records, see Rule 51.17(d).

Note: Material advantage includes improving his position by any means, including removing himself from a "boxed" position in the race by having stepped or run inside the inside edge

of the track.

COMMENT: This Rule specifically outlaws the practice of an athlete seeking to improve his position in races by moving onto the inside of the track (whether intentionally or after being pushed or jostled there by another athlete) to get out of a boxed position by running on the inside until clear. Whilst normally running on the inside of lane 1 in the straight (as distinct from doing so on the bend) would not lead to mandatory disqualification, the Referee has the power to disqualify in his discretion if this occurs and the athlete is advantaged even if the initial reason for being there was the result of being pushed or jostled. In such cases the athlete should take immediate steps to return to the track without seeking or gaining any advantage.

Where a race is started in lanes and then continues not using separate lanes, Rules 18.5 and 18.6 apply accordingly to each such part of the race. When determining whether the exception in Rule 18.6.(c) applies in cases where some part of the shoe/foot/prosthesis or wheel is also to the left of the line, there is a requirement for at least some part of the outline of athlete's shoe/foot/prosthesis or wheel to be touching the line, i.e. some contact with the line (depicted by the outline of the relevant part of the shoe/foot/ prosthesis or wheel) is required for this exception to apply. If this is not the case, then the exception does not apply. All lane infringements should be tracked in the competition data systems and shown in the start lists and results.

In relation to the exception in Rule 18.6(c) for wheelchair racers, it is understood that, whilst there may only be a single contact, the duration of the contact of the wheel of the racing chair with the line may be for a prolonged period that might afford the athlete a material advantage. That being the case the athlete shall be permitted [two] pushes on the push rim of the racing chair from the point at which the racing chair first touched the line to bring himself back within the lane (so as not to be touching the line) to the effect that, if the athlete makes a [third] push on the push rim of the racing chair whilst the racing chair is in contact with the line, the athlete shall be disqualified.

7. In IPC Games and IPC Competitions (see Part B - 3.1.2 (a) and (b)) the start of the 800m event shall be run in lanes for as far as the nearer edge of the break line where athletes may leave their respective lanes.

   The break line shall be an arced line marked after the first bend, 50mm wide, across all lanes other than lane 1. To assist athletes in identifying the break line, small cones or

prisms, 50mmx50mm no more than 0.15m high, and preferably of different colour from the break line and the lane lines, shall be placed on the lane lines immediately before the intersection of the lane lines and the break line. If an athlete or his accompanying guide-runner does not follow this Rule he, or in case of a relay team his team, shall be disqualified.

Note (i): For wheelchair and Frame Running races, cones should not be placed on the track. Coloured flat markers 50mmx50mm may be placed at the intersection of the lane lines at the break-line.

COMMENT: In addition to the flags, some sort of flat marker may be placed on the track surface at the intersection of the lane lines immediately before the break-line; which may be more visible to athletes and not interfere with their performance. It is important that the colour of these flat markers, usually tape, must be a different colour to both the surface of the track and the white lines. It could be a coloured marker with a soft "flap" sticking up, as long as that will not disrupt athletes.

Note (ii): For wheelchair races, a flag, 1.5m high must be positioned on both ends of the break line. One on the infield and the other on the outside of the track.

Note (iii): For wheelchair races, athletes may leave their respective lanes when the bottom of both rear wheels which are touching the ground have gone past the nearer edge of the break line close to the start line.

Note (iv): In WPA Approved Competitions (see Part B - 3.1.2 (d)), countries may agree not to use lanes.

8. For athletes in Sport Class T11and T12, in track events run entirely or partly in lanes, each shall be allocated 2 lanes. The start lines in a staggered start will be lanes 1, 3, 5 or 7.

COMMENT: For the purpose of officiating, these two lanes should be viewed and marked as one lane (lanes 1 & 2 = lane 1, lanes 3 & 4 = lane 3, and so on). It is at the discretion of the athlete on which side of him his guide-runner shall run. Both the athlete and guide-runner must keep within their allocated lane (being the two allocated lanes together) from start to finish.

Athletes in Sport Class T12 who do not compete with a guide-runner shall also be allocated two lanes. They may set their starting blocks anywhere along the start line within the allocated lane and must keep within their allocated lane from start to finish.

Leaving the Track

9. An athlete and/or the accompanying guide-runner who during the course of a race voluntarily leaves the track prior to the finish, except in compliance with Rule 23.5(c) will not be allowed to continue in the race and shall be recorded as not finishing the event. Should the athlete and/or his guide-runner attempt to re-enter or continue in the race the athlete shall be disqualified by the Referee.

Check-Marks

10. Except as stated in Rule 23.3, athletes may not make check-marks or place objects on or alongside the running track for their assistance. The Judges shall direct the relevant athlete to adapt or remove any marks or objects not complying with this Rule. If he does not, the Judges shall remove them.

    Note: Serious cases may further be dealt with under Rule 2.13.5 and Rule 8.2.

Wind Measurement

11. All wind gauge equipment shall have been manufactured and calibrated according to international standards. The accuracy of the Measurement equipment used in the competition shall have been verified by an appropriate organisation accredited by the national measurement authority.

12. Non-mechanical wind gauges shall be used at all IPC Games and IPC Competitions (see Part B - 3.1.2 (a) and (b)) and for any performance submitted for ratification as a World/Regional Record.

    A mechanical wind gauge should have appropriate protection to reduce the impact of any crosswind. Where tubes are used, their length on either side of the measuring device should be at least twice the diameter of the tube.

13. The Track Referee shall ensure that the wind gauge for Track Events is placed beside the straight, adjacent to lane 1, and 50m from the finish line. It shall be positioned 1.22m high and not more than 2m away from the track.

14. The wind gauge may be started and stopped automatically and/or remotely, and the

information conveyed directly to the competition computer.

15. The periods for which the wind velocity shall be measured are as follows:

    In the 100m event – for 10 seconds immediately following the start.

    In the 200m event – the wind velocity shall be measured for a period of 10 seconds commencing when the first athlete enters the straight.

16. The wind gauge shall be read in metres per second, rounded to the next higher tenth of a meter per second, unless the second decimal is zero, in the positive direction (that is, a reading of +2.03 meters per second shall be recorded as +2.1; a reading of -2.03 meters per second shall be recorded as -2.0). Gauges that produce digital readings expressed in tenths of meters per second shall be constructed so as to comply with this Rule.

Indication of Intermediate Times

17. Intermediate times and preliminary finishing times may be officially announced and/or displayed. Otherwise, such times must not be communicated to the athletes by persons in the competition area without the prior approval of the appropriate Referee who may authorise or appoint no more than one person to call times at each of no more than two agreed timing points.

    Athletes who receive intermediate times that have been communicated in violation of this Rule shall be considered to have received assistance and will be subject to the provisions of Rule 7.2.

    For Sport Class T12 in events of 800m and above, athletes who compete without a guide-runner may have assistance from personnel other than from competition officials, who will be permitted to call intermediate times from a designated area inside the competition area adjacent to the start line of the respective event where appropriate. The placement of this area shall be determined by the Technical Delegate.

    Note (i): Individuals who are placed in this location inside the competition area are not permitted to give any guidance to the athletes other than the reading of intermediate times. In violation of this Rule, the athlete concerned shall be warned or disqualified subject to Rule 7.2.

Note (ii): The competition area, which normally also has a physical barrier, is defined for this purpose as the area where the competition is being staged and which has an access restricted to the competing athletes and to personnel authorised in accordance with the relevant Rules and Regulations.

Drinking / Sponging

18. In Track Events of 5000m and 10000m, the LOC may provide water and sponges to athletes if weather conditions warrant such provision.

    a) An athlete and/or the athlete's guide-runner may, at any time, carry water or refreshment by hand or attached to his body provided it was carried from the start or collected or received at an official station.

    b) An athlete and/or guide-runner who receives or collects refreshment or water from a place other than the official stations, except where provided for medical reasons from or under the direction of race officials, or takes the refreshment of another athlete and/or guide-runner, should, for a first such offence, be warned by the Referee normally by showing a yellow card. For a second offence, the Referee shall disqualify the athlete, normally by showing a red card. The athlete shall then immediately leave the track.

Note: An athlete and/or guide-runner may receive from or pass to another athlete and/or guide-runner refreshment, water or sponges provided it was carried from the start or collected or received at an official station. However, any continuous support from an athlete and/or guide-runner to one or more others in such a way may be regarded as unfair assistance and warnings and/or disqualifications as outlined above may be applied.

Rule 19: The Finish

(Rule 164)

1. The position of the finish of a race shall be denoted by a white line 50mm wide.

2. The ambulant athletes shall be placed in the order in which any part of their torso (not the head, neck, arms, legs, hands or feet) reaches the vertical plane of the nearer edge of the finish line.

3. In wheelchair and Frame Running races the athletes shall be placed in the order in which the

centre of the axle of the leading wheel reaches the vertical plane of the nearer edge of the finish line as defined above.

4. In races for athletes in Sports Class T11 and T12 competing with a guide-runner the athlete must reach the nearer edge of the finish line in front of the guide-runner or the athlete will be disqualified. When photo finish is in use, the Chief Photo Finish Judge shall make this determination and apply any disqualification. In any other case, or where a Photo Finish image is not available, the Track Referee shall decide.

5. Event Time Limits (Sport Classes T32-34 and T51-54)

   In wheelchair races of 1500m or longer, officials may conclude the event and clear the track after an agreed time limit has expired. Any athlete who has not completed the set distance when an event is concluded shall be shown in the official results as “DNF” (i.e., Did Not Finish). The referee has the authority to remove any athlete who has been overlapped.

Rule 20: Timing and Photo Finish

(Rule 165)

1. Three alternative methods of timekeeping shall be recognised as official:
   a) Hand Timing;
   b) Fully Automatic Timing obtained from a Photo Finish System;
   c) For road races only - timing provided by a Transponder System.
2. Save for wheelchair and Frame Running races, under Rule 20.1 (a) and Rule 20.1 (b) the time shall be taken to the moment at which any part of the body of an athlete (i.e., torso as distinguished from the head, neck, arms, legs, hands or feet) reaches the vertical plane of the nearer edge of the finish line.
3. In wheelchair and Frame Running races the time shall be taken to the moment in which the centre of the axle of the leading wheel reaches the vertical plane of the nearer edge of the finish line as defined above.
4. Times for all finishers shall be recorded. In addition, whenever possible, lap times in races of 800m and over shall be recorded.

Hand Timing

5. The Timekeepers shall be in line with the finish and where possible, they should be placed at least 5m from the outside lane of the track. In order that they may all have a good view of the finish line, an elevated stand should be provided.
6. Timekeepers shall use manually operated electronic timers with digital readouts. All such timing devices are termed “watches” for the purpose of the Rules.
7. The lap and intermediate times shall be recorded either, by designated members of the timekeeping team using watches capable of taking more than one time, or by additional Timekeepers, or by transponders.
8. The time shall be taken from the flash / smoke of the gun.

9. Three official Timekeepers (one of whom shall be the Chief Timekeeper) and one or two additional Timekeepers shall time the winner of every event and any performances for record purposes.

   The times recorded by the additional Timekeepers' watches shall not be considered unless one or more of the official Timekeepers' watches fail to record the time correctly, in which case the additional Timekeepers shall be called upon, in such order as has been decided previously, so that in all the races, three watches should have recorded the official winning time.

10. Each Timekeeper shall act independently and without showing his watch to, or discussing his time with, any other person, shall enter his time on the official form and, after signing it, hand it to the Chief Timekeeper who may examine the watches to verify the reported times.

11. For all hand-timed races, times shall be read and recorded as follows:

    a) For races on the track, unless the time is an exact 1/10th of a second, the time shall be read and recorded to the next longer 1/10th of a second, e.g. 10.11 shall be recorded as 10.2;

    b) For races partly or entirely outside the stadium, unless the time is an exact whole second, the time shall be converted and recorded to the next longer whole second, e.g., for the Marathon 2:39:44.3 shall be recorded as 2:39:45.

12. If, after converting as indicated above, two of the three watches agree and the third disagrees, the time recorded by the two shall be the official time. If all three watches disagree, the middle time shall be official. If only two times are available and they disagree, the longer time shall be official.

13. The Chief Timekeeper, acting in accordance with the Rules mentioned above, shall decide the official time for each athlete and provide the results to the Competition Secretary for distribution.

Fully Automatic Timing and Photo Finish System

The System

14. A Fully Automatic Timing and Photo Finish System must have been tested and have a

certificate of accuracy within 4 years of the competition, including the following:

a) The System must record the finish through a camera positioned in the extension of the finish line producing a composite image.

   i) For competitions as defined in Part B - 3.1.2, this composite image must be composed of at least 1000 images per second.

   ii) For other competitions, this composite image must be composed of at least 100 images per second.

In each case, the image must be synchronised with a uniformly marked time scale graduated in 0.01 seconds.

b) The System shall be started automatically by the Starter's signal, so that the overall delay between the report from the muzzle, or its equivalent visual indication and the start of the timing system is constant and equal to, or less than 0.001 seconds.

15. In order to confirm that the camera is correctly aligned and to facilitate the reading of the Photo Finish image, the intersection of the lane lines and the finish line shall be coloured black in a suitable design. Any such design must be solely confined to the intersection, for no more than 20mm beyond, and not extended before, the leading edge of the finish line. Similar black marks may also be placed on each side of the intersection of an appropriate lane and the finish line to further facilitate reading.

COMMENT: If we want to define a minimum in order to achieve the accuracy required in Rule 20.24, a composite of at least 100 component images per second is required. To achieve the accuracy demanded in Rule 22.2 for determining fastest losers by reference to times read to 0.001 second where times achieved by athletes are identical to 0.01 second then a composite of at least 1000 component images per second would be required. Most photo finish systems can operate at 1000 images per second or greater.

16. The placing of the athletes shall be identified from the image by means of a cursor with its reading line guaranteed to be perpendicular to the time scale.

17. The System must automatically determine and record the finish times of the athletes and must be able to produce a printed image which shows the time of any athlete. Additionally, the system shall provide a tabular overview which shows the time of every athlete. Subsequent changes of automatically determined values and manual input of values (such as start time, finish time), shall be indicated by the system automatically in the time scale of

the printed image and the tabular overview.

18. A System which operates automatically at the finish, but not at the start, shall be considered to produce Times provided that the system was started in accordance with Rule 20.8 or with equivalent accuracy. The image may be used as a valid support in order to determine placings and adjust time intervals between athletes.

    Note: If the timing mechanism is not started by the Starter's signal, the time-scale on the image shall indicate this fact automatically.

19. A system which operates automatically at the start but not at the finish, shall be considered to produce neither Hand nor Fully Automatic Times and shall not therefore be used to obtain official times.

Operation of the System

20. The Chief Photo Finish Judge shall be responsible for the functioning of the System. Before the start of the competition, he will meet the technical staff involved and familiarise himself with the equipment, checking all applicable settings. In cooperation with the Track Referee and the Starter, he shall initiate a zero control test, before the beginning of each session, to ensure that the equipment is started automatically by the Starter's signal within the limit of 0.001 second. He shall supervise the testing of the equipment and ensure that the camera(s) is correctly aligned.

21. There should be at least two photo finish cameras in action, one from each side. Preferably, these timing systems should be technically independent, i.e., with different power supplies and recording and relaying the report of the Starter's signal, by separate equipment and cables.

    Note: Where two or more Photo Finish cameras are used, one should be designated as official by the Technical Delegate (or International Photo Finish Judge where appointed) before the start of the competition. The times and places from the images of the other camera(s) should not be considered unless there is reason to doubt the accuracy of the official camera or if there is need to use the supplementary images to resolve uncertainties in the finishing order (i.e., athletes wholly or partially obscured on the image from the official camera).

22. In conjunction with his Assistants, the Chief Photo Finish Judge shall determine the placing

of the athletes and, as a consequence, their official times. He shall ensure that these results are correctly entered in or transferred to the competition results system and conveyed to the Competition Secretary. He shall also make any necessary determination and disqualification under Rule 19.4.

COMMENT: At major events where the technology is available, the photo finish image is often immediately provided on the video board or published on the internet. It has become the practice to provide athletes, or persons on their behalf, who are considering making a protest or appeal the opportunity to see the photo, in order to avoid time being spent on any unnecessary protests or appeals.

23. Times from Photo Finish System shall be regarded as official unless for any reason the appropriate official decides that they obviously must be inaccurate. If such is the case, the times of the back-up Timekeepers, if possible adjusted based on information on time intervals obtained from the Photo Finish image, shall be official. At the discretion of the TD, such back-up Timekeepers may be appointed where any possibility exists of failure of the timing system.

24. Times shall be read and recorded from the Photo Finish image as follow:

    a) For all track races up to and including 10,000m, unless the time is an exact 0.01 second the time shall be converted and recorded to the next longer 0.01 second, e.g. 26:17.533 shall be recorded as 26:17.54.

    b) For all races held partly or entirely outside the stadium, all times not ending in three zeroes shall be converted and recorded to the next longer whole second, e.g., for the Marathon, 2:09:44.322 shall be recorded as 2:09:45.

Transponder System

25. The use of Transponder Timing Systems complying with the World Athletics Rules for Road Race Events is permitted provided that:

    a) None of the equipment used at the start, along the course or at the finish line constitutes a material obstacle or barrier to the progress of an athlete;

    b) The weight of the transponder and its housing carried or worn by the athletes is not significant;

c) The System is started by the Starter's gun or synchronized with the start signal;

d) The System requires no action by an athlete during the competition, at the finish or at any stage in the result processing;

e) For all races, the time shall be converted to 0.1 second and recorded to the whole second. All read times not ending in zero shall be converted and recorded to the next longer whole second, e.g., for the Marathon, 2:39:44.3 shall be recorded as 2:39:45;

Note: The official time shall be the time elapsed between the firing of the starting gun (or the synchronised start signal) and the athlete reaching the finish line. However, the time elapsed between an athlete crossing the start line and the finish line can be made known to him, but will not be considered an official time.

f) It is recommended that judges and/or video recording(s) also be provided to assist in determining the finishing order and the identification of athletes.

26. The Chief Transponder Timing Judge shall be responsible for the functioning of the System. Before the start of the competition, he will meet the technical staff involved and familiarise himself with the equipment, checking all applicable settings. He shall supervise the testing of the equipment and ensure that the passing of the transponder over the finish line will record the athlete's finish time. In conjunction with the referee, he shall ensure that provision is made for the application, when necessary, of Rule 20.25 (f).

COMMENT: Transponder timing is acceptable for World Record performances in races outside of the stadium.

Rule 21: Seedings, Draws and Qualification in Track Events

(Rule 166)

Rounds and Heats

1. Qualification Rounds shall be held in Track Events in which the number of athletes is too large to allow the competition to be conducted satisfactorily in a single round (final). Where Qualification Rounds are held, all athletes must compete in, and qualify through, all such rounds except that the relevant governing body, may, for one or more events, authorise the conduct of additional preliminary qualification round(s) either at the same competition or at

one or more earlier competition(s) to determine some or all of the athletes who shall be entitled to participate and in which round of the competition. Such procedure and any other means (such as e.g. achieving entry standards during a specified period, by specified placing in a designated competition or by specified rankings) by which an athlete is entitled to participate, and in which round of the competition, shall be set out in the regulations for each competition.

COMMENT: This Rule was adopted by WPA in March 2016 following World Athletics amendments so that the Championship competitions can, through the specific regulations for each competition, begin at a point earlier than the competition and that this can be achieved in different ways.

2. The Qualification Rounds shall be arranged by the appointed Technical Delegates. If no Technical Delegates have been appointed, they shall be arranged by the LOC.

   The following tables shall, in the absence of extraordinary circumstances, be used to determine the number of rounds, and the number of heats in each round, to be held and the qualification procedure, i.e., those to advance by place (P) and time (T), for each round of Track Events:

   a) Whenever possible, representatives of each nation or team and the best-performed athletes shall be placed in different heats in all Qualification Rounds of the competition. In applying this Rule after the first round, the required exchanges of athletes between heats should, to the extent possible, be made between athletes seeded in the same "group of lanes" according to Rule 21.4 (b).

   b) When heats are being arranged, it is recommended that as much information as possible about the performances of all athletes should be considered and the heats drawn so that, normally, the best performers reach the final.

COMMENT: The Qualification Rounds should determine in the best possible way the athletes who will take part in the next round and eventually the final. This includes avoiding where possible the clashing of the best performed athletes (determined generally on performance in the qualification period but also taking into account such matters as outstanding recent career records) in the same heats as also applies to athletes from the same nation or team. For major competitions, at least, the basis of the seeding should be the best times achieved by each athlete in valid conditions (including with wind readings for the relevant events) during the pre-

determined period. This period will usually be specified in the Technical Regulations or in the document setting out the entry conditions and standards for the competition. Where there is no such specification, then the technical delegate(s) or the LOC should decide the basis on which the seeding will be determined. Such factors as performances achieved during training or tests, even if they appeared to look like competition or notions about what an athlete might "be worth" but has never achieved, should not be taken into account in seeding. The requirements of the Rule in relation to the "best performed athletes" does require some deviation from the strict protocol outlined above. For example, an athlete who might normally be seeded in a high position might not have any, or only a poor, valid performance in the predetermined period (through injury, illness, ineligibility or in the case of indoor meetings only have outdoor results). Whilst he would normally be placed lower or at the bottom of the seeding list, adjustment should be considered by the Technical Delegate(s). Similar principles should be applied to avoid a clash in a Qualification Round between athletes considered to be the favourites to place highly in the event if the results of the previous round would strictly dictate that they should be in the same heat. At this same time any adjustments to ensure as much as possible that athletes from the same nation or team are in different heats should also be made. In all such cases adjustments of the seeding should be made after the initial allocation to the heats but before any draw is made for the lanes. In applying these principles exchanges of athletes should be made:

a) In the first round, between athletes with a similar ranking on the list of best valid performances during the pre-determined period; and

b) In subsequent rounds, between athletes seeded in the same "group of lanes" according to Rule 21.4 (b).

Following these principles is more important in competitions in which the number of rounds has been reduced in some events - making accurate and well considered seeding vital to achieving both a fair and an athletically appealing outcome.

For lower level competitions, the technical delegate(s) or the LOC may consider use different principles to achieve a similar final outcome.

100m, 200m, 400m,

Declared Entries	First Round Heats	Place	Time	Second Round Heats	Place	Time	Semi-Finals Heats	Place	Time
9-16	2	3	2						
17-24	3	2	2						
25-32	4	3	4				2	3	2
33-40	5	4	4				3	2	2
41-48	6	3	6				3	2	2
49-56	7	3	3				3	2	2
57-64	8	3	8	4	3	4	2	4	
65-72	9	3	5	4	3	4	2	4	
73-80	10	3	2	4	3	4	2	4	
81-88	11	3	7	5	3	1	2	4	
89-96	12	3	4	5	3	1	2	4	
97-104	13	3	9	6	3	6	3	2	2
105-112	14	3	6	6	3	6	3	2	2

800m, 4x100m, 4x200m, 4x400m

Declared	First Round			Second Round			Semi-Finals		
Entries	Heats	Place	Time	Heats	Place	Time	Heats	Place	Time
9-16	2	3	2						
17-24	3	2	2						
25-32	4	3	4				2	3	2
33-40	5	4	4				3	2	2
41-48	6	3	6				3	2	2
49-56	7	3	3				3	2	2
57-64	8	2	8				3	2	2
65-72	9	3	5	4	3	4	2	4	
73-80	10	3	2	4	3	4	2	4	
81-88	11	3	7	5	3	1	2	4	
89-96	12	3	4	5	3	1	2	4	
97-104	13	3	9	6	3	6	3	2	2
105-112	14	3	6	6	3	6	3	2	2

1500m

Declared	First Round			Second Round			Semi-Finals		
Entries	Heats	Place	Time	Heats	Place	Time	Heats	Place	Time
16-30	2	4	4						
31-45	3	6	6				2	5	2
46-60	4	5	4				2	5	2
61-75	5	4	4				2	5	2

5000m

Declared Entries	First Round Heats	Place	Time	Second Round Heats	Place	Time	Semi-Finals Heats	Place	Time
20-40	2	5	5						
41-60	3	8	6				2	6	3
61-80	4	6	6				2	6	3
81-100	5	5	5				2	6	3

10,000m

Declared Entries	First Round Heats	Place	Time
28-54	2	8	4
55-81	3	5	5
82-108	4	4	4

The following alternative tables shall be used for the specific class or class combination as denoted in the respective table. For class combination not entirely covered by the below tables, the above regular tables shall normally be applied, otherwise an appropriate table shall be determined by the Technical Delegate.

100m, 200m, 400m, 800m (T11-12)

Declared	First Round			Second Round			Semi-Finals		
Entries	Heats	Place	Time	Heats	Place	Time	Heats	Place	Time
5-8	2	1	2						
9-12	3	1	1						
13-16	4	1	4				2	1	2
17-20	5	1	7				3	1	1
21-24	6	1	6				3	1	1
25-28	7	1	5				3	1	1
29-32	8	1	8	4	1	4	2	1	2

1500m (T11-12)

Declared	First Round			Second Round			Semi-Finals		
Entries	Heats	Place	Time	Heats	Place	Time	Heats	Place	Time
7-12	2	2	2						
13-18	3	1	3						

5000m, 10000m (T11-12)

Declared	First Round			Second Round			Semi-Finals		
Entries	Heats	Place	Time	Heats	Place	Time	Heats	Place	Time
11-20	2	3	4						
21-30	3	2	4						

1500m, 5000m (T32-34 and T51-54)

Declared Entries	First Round Heats	Place	Time	Second Round Heats	Place	Time	Semi-Finals Heats	Place	Time
11-20	2	3	4						
21-30	3	3	1						
31-40	4	4	4				2	3	4

10000m (T32-34 and T51-54)

Declared Entries	First Round Heats	Place	Time	Second Round Heats	Place	Time	Semi-Finals Heats	Place	Time
13-24	2	4	4						
25-36	3	3	3						
37-48	4	3	0						

4x100m, 4x100m Universal Relay, 4x400m (T11-13, T33-34, T51-52 and T53-54)

Declared Entries	First Round Heats	Place	Time	Second Round Heats	Place	Time	Semi-Finals Heats	Place	Time
5-8	2	0	4						
9-12	3	0	4						
13-16	4	0	8				2	0	4

Note: For World Championships and Paralympic Games, alternate tables may be included in the relevant Technical Regulations.

COMMENT: The most complex event for seeding progressions is the 800m as it crosses both the laned events and non-lane events where seed performances are needed. This is critical for lane assignments as the progressions is based generally on finish place and time in the previous race and athletes are ranked according to seed times or performance in previous race, which are better than seed times are used (as noted in Rule 21.3 (b) below).

Ranking and Composition of Heats

3. For the first round, the athletes shall be placed in heats using the zigzag distribution with the seeding determined from the relevant list of valid performances achieved during the predetermined period.

   a) After the first round, the athletes shall be placed in the heats of subsequent rounds in accordance with the following procedures:

      For events of 100m to 400m inclusive, and relays up to and including 4x400m, seeding shall be based upon placings and times of each previous round. For this purpose, athletes shall be ranked as follows:

      i) Fastest heat winner
      ii) 2nd fastest heat winner
      iii) 3rd fastest heat winner, etc.
      iv) Fastest 2nd place
      v) 2nd fastest 2nd place
      vi) 3rd fastest 2nd place, etc
      (Concluding with)
      vii) Fastest time qualifier
      viii) 2nd fastest time qualifier
      ix) 3rd fastest time qualifier, etc.

   b) For other events, the original performance lists shall continue to be used for seeding, modified only by improvements in performances achieved during the earlier round(s).

   c) The athletes shall then be placed in heats in the order of seeding in a zigzag distribution, e.g., three heats will consist of the following seedings:

A	1	6	7	12	13	18	19	24
B	2	5	8	11	14	17	20	23
C	3	4	9	10	15	16	21	22

   d) In all cases, the order in which heats are to be run shall be determined by draw after the composition of the heats has been decided.

COMMENT: For the first round in order to reduce the number of heats required, it is acceptable and normal for additional available lanes (for example a ninth lane on a straight or oval track) to be used in races up to and including 400m and to have more than one athlete in a lane at the

start of an 800m race.

The random draw to determine the order in which the heats are conducted is based on fairness. In middle and long-distance races, the athletes running in the last heat will know as far as qualifying by times the performance they have to realise in order to qualify. Even with the shorter races there is a fairness aspect as weather conditions can change (rain suddenly falling or an alteration in wind strength or direction). Fairness dictates that order be determined by chance.

Draw for Lanes

4. For events 100m to 800m inclusive, and relays up to and including 4x400m, where there are several successive rounds of a race, lanes will be drawn as follows:

   a) In the first round and any additional Qualification Round as per Rule 21.1, the lane order shall be drawn by lot;

   b) For the following rounds, athletes shall be ranked after each round in accordance with the procedure shown above.

      Three draws will then be made:

      i) One for the four highest ranked athletes or teams to determine placings in lanes 3, 4, 5 and 6;
      ii) Another for the fifth and sixth ranked athletes or teams to determine placings in lanes 7 and 8, and;
      iii) Another for the two lowest ranked athletes or teams to determine placings in lanes 1 and 2.

      Note (i): When there are fewer than 8 lanes, the above system with the necessary modifications should be followed.
      Note (ii): In Sanctioned and Approved Competitions the 800m event may be run with one or two athletes in each lane, or with group start behind an arced line. This should normally be applied only in the first round, unless because of ties or advancement by the Referee, there are more athletes in a race of a subsequent round than were anticipated.

Note (iii): In any 800m race, including a final, where for any reason there are more athletes competing than lanes available, the Technical Delegate shall determine in which lanes more than one athlete will be drawn.

Note (iv): when there are more lanes than athletes, the inside lane(s) should always remain free.

COMMENT: With regard to Note (iii), there is no exact specification as to how the Technical delegates should act as the situations which may give rise to it may vary greatly. However, this issue only affects the running of the first bend of the race and is not as important as the allocation of lanes in a shorter race. Technical delegate(s) are advised to place the additional athlete(s) in the lane(s) where the "double-up" will cause least inconvenience - usually the outer lanes so that the athletes are not running around a tighter bend together.

As to Note (iv), where a stadium has more than eight lanes available, the Technical Delegate(s) (or if none the LOC) should decide in advance which lanes are to be used for this purpose. For example, in the case of a nine-lane oval track, lane one would not be used in cases where less than nine athletes are taking part in a race. Consequently, for the purposes of Rule 21.4, lane 2 is regarded as lane 1 and so on. The allocation of lanes for T11-12 track races when a 9- lane track is being used is as follow: lanes 1-2, 3-4, 5-6, 7-8 are allocated to athletes and guide-runners with the outside lane (9) remaining free.

Single Rounds

5. For any track events where only a single round (final) is required, lanes/starting positions shall be drawn by lot, except at IPC Games and IPC Competitions under Part B - 3.1.2 (a) and (b), for Track Events running entirely in lanes i.e., 100m, 200m, 400m, 4x100m lanes shall be drawn according to the ranking determined from the relevant list of valid performance achieved during that predetermined period and Rule 21.4 b) (i) (ii) (iii).

COMMENT: The intent of this rule is to ensure that where there may not be sufficient athletes at a competition to justify heats and finals, that the better athletes are not disadvantaged by random lane draws. Therefore, at the IPC Games and IPC Competitions seed times/performances achieved during a predetermined time period as specified in the technical regulations for the competition will be used to determine lane draws.

6. Where it is decided to conduct a series of races in an event rather than rounds and finals, the Regulations for the competition shall set out all relevant considerations including seedings and draws and the method by which the final results will be determined.
7. An athlete shall not be allowed to compete in a heat or lane other than the one in which his name appears, except in circumstances which, in the opinion of the Referee, justify an alteration.

Progression

8. In all Qualification Rounds, unless otherwise provided by alternate tables permitted under Rule 21.2, at least the first and second places in each heat shall qualify for the next round and it is recommended that, where possible, at least three in each heat should qualify. Except where Rule 22 applies, any other athletes may qualify by place or by time according to Rule 21.2 the particular Technical Regulations, or as determined by the Technical Delegate(s). When athletes are qualified according to their times, only one system of timing may be applied.

   Note: If the Technical Delegate decides different tables are to apply, it is recommended in races longer than 800 metres where rounds are conducted, that only a small number of athletes qualify by time.

COMMENT: Where tables are prescribed in the regulations for a competition it is usual that the principle set out in Rule 21.8 will have been incorporated. Where not, the Technical Delegates or LOC should follow same principle when establishing the progression table to be used. There will however be occasions when Rule 22 may cause a variation to be applied, particularly where there is a tie for the last qualifying position based on place. In such cases, it may be necessary for one less athlete to progress on time. In circumstances where there are sufficient additional lanes available, or in the case of the 800m (where a lane at the start may be used for more than one athlete) or a non-laned race, the Technical delegate(s) may decide to progress an additional athlete(s).Because of the provision within Rule 21.8 that for time qualification only one system of timing may be applied it is important for back-up timing systems to be available for qualification rounds in case the primary system (usually photo finish) fails. In the event that only times from different timing systems are available for two or more heats, the Technical delegates in conjunction with the Track Referee should determine, within the circumstances of

the particular competition, the fairest method for determining those athletes who should proceed to the next round. Where additional lanes are available, it is recommended that this option be considered first.

One Day Meetings

9. In WPA Approved Competitions under Part B - 3.1.2 (d), athletes may be seeded, ranked and/or allocated to lanes in accordance with the applicable regulations for the competition or any other method determined by the LOC but preferably notified to the athletes and their representatives in advance.

COMMENT: In one day meetings, if there is only a "final" round but with more than one race, the races should be arranged according to any applicable regulations for the meeting or the series of meetings of which it is a part. If there are none then it is usual for allocation of athletes to the various "races" to be undertaken by the LOC or if requested by the appointed Technical Delegate(s).

Similar considerations apply to how the final ranking of the athletes in such events will be made. In some meetings the "race(s)" other than the main race are regarded as separate races and are not considered for the overall ranking but in others the results of more than one race are "combined" to give the overall ranking. It is highly advisable to ensure that whichever is to apply for the competition is also notified to the participants in advance as it may affect prizes and other considerations.

Minimum Times between Rounds

10. The following minimum times must be allowed, when practicable, between the last heat of any round and the first heat of a subsequent round or final:

Up to and including 200m	45 minutes
Over 200m up to and including 1000m	90 minutes
Over 1000m	Not on the same day

Rule 22: Ties

(Rule 167)

1. If the Judges or the Photo Finish Judges are unable to separate the athletes for any place according to Rules 19.2, Rule 19.3, and 20.18, 20.22 or 20.25 (as may be applicable), it shall be determined to be a tie and the tie shall remain.

Tie for ranking position (according to Rule 21.3 (a)

2. If there is a tie for any ranking position under Rule 21.3 (a), the Chief Photo Finish Judge shall consider the actual times recorded by the athletes to .001 second and if it is equal, it shall be determined to be a tie and lots shall be drawn to determine the higher ranking position.

Tie for last qualifying position based on place

3. If after the application of Rule 22.1, there is a tie for a last qualifying position based on place, if there are lanes or positions available (including lane sharing in 800m races) the tying athletes shall be placed in the next round. If that is not practicable lots shall be drawn to determine which athlete(s) shall be placed in the next round.

4. Where qualifying for the next round is based on place and time (e.g., the first three in each of two heats plus the next two fastest), and there is a tie for the last qualifying position based on place, placing the tied athletes in the next round shall reduce the number of athletes qualifying based on time.

Tie for last qualifying position based on time

5. If there is a tie for a last qualifying position based on time, the Chief Photo Finish Judge shall consider the actual times recorded by the athletes to .001 second and if it is equal, it shall be determined to be a tie. If there are lanes or positions available (including lane sharing in 800m races) the tying athletes shall be placed in the next round. If that is not practicable lots shall be drawn to determine which athlete(s) shall be placed in the next round.

Rule 23: Relay Races

(Rule 170)

1. Lines 50mm wide shall be drawn across the track to mark the distances of the legs and to denote the scratch line.

2. In ambulant relay races of 4x100m, 4x200m relays and for the first and second take-overs in the 4x100m universal relays, each take-over zone shall be 30m long, of which the scratch line is 20m from the start of the zone. For wheelchair relay races of 4x100m and 4x400m and for the third take-over in the 4x100m universal relay*, the* take-over zone shall be 40m long of which the scratch line is 30m from the start of the zone. The zones shall start and finish at the edges of the zone lines nearest the start line in the running direction. For each takeover conducted in lanes, a designated official shall ensure that the athletes are correctly placed in their takeover zone. The designated officials shall also ensure that Rule 23.3 is observed.

COMMENT: The Umpires must ensure that each athlete from each team takes his position in the correct lanes or position. The Starter's Assistants will be responsible for the positioning of the first runners and for ensuring that each is supplied with a baton when required. They may also be assigned to assist at any takeover zones which subsequently occur at the start line. Chief Umpires for each takeover zone and the umpires placed at their disposal will be responsible for the positioning of the subsequent runners. When all athletes are correctly positioned, the zone Chief Umpire should advise the relevant other officials by the agreed means of communication – which for major competitions would usually be by radio.

They must also ensure that for all takeovers the outgoing runners' feet, prosthetic device(s) and both rear wheels are completely inside the zone before they commence their movement which eventuates in either the taking of the baton or the touch. This movement may not commence at any point outside the zone.

3. When all or the first portion of a relay race is being run in lanes, an athlete or guide-runner may place one check-mark on the track within his own lane, by using adhesive tape, maximum 5cmx40cm, of a distinctive colour which cannot be confused with other permanent markings. No other check-mark may be used.

Note: For the 4x100m universal relay, the Technical Delegate(s) may, upon request, permit an assistant at each take-over zone, to help the athlete with the placement of a distinctive check-mark on the track within his own lane.

4. The relay baton shall be a smooth hollow tube, circular in section, made of wood, metal or any other rigid material in one piece, the length of which shall be 28cm to 30cm. The outside diameter shall be 40mm (±2mm) and it shall not weigh less than 50g. It should be coloured so as to be easily visible during the race.

   Note: For wheelchair relays in IPC Games and IPC Competitions (see Part B – 3.1.2 (a) and (b)), the LOC shall provide helmet socks to each team of a distinctive colour so as to be easily identified during the race.

COMMENT: For the Wheelchair relay races helmet socks shall be required to be worn by athletes in addition to or in place of helmet numbers. Where this is required, the LOC shall ensure that helmet socks are available. The Call Room Judges are responsible for ensuring that the helmet socks are checked in the Call Room.

5.

   a) A baton shall be used for all Relay Races held in the Stadium and shall be carried by hand throughout the race except as stated in Rule 23.6 for wheelchair relays, amputee relays and 4x100m universal relays. At least in IPC Games and IPC Competitions (see Part B - 3.1.2 (a) and (b)), each baton shall be numbered and of a different colour and may include a timing transponder.

      Note: If possible, the allocation of the colour to each lane or starting order position should be shown on the start list.

   b) Athletes and guide-runners are not permitted to wear gloves or to place material (other than those permitted by Rule 7.4(c) or substances on their hands in order to obtain a better grip of the baton.

   c) If dropped, the baton shall be recovered by the athlete or guide-runner who dropped it. He may leave his lane to retrieve it provided that, by doing so, he does not lessen the distance to be covered. In addition, where the baton is dropped in such a way that it moves sideways or forward in the direction of running (including beyond the finish line), the athlete or guide-runner who dropped it, after retrieving it, must return at least to the

point where it was last in his hand before continuing in the race. Provided this procedure is adopted and no other athlete or guide-runner is impeded, dropping the baton shall not result in disqualification.

If an athlete or guide-runner does not follow this Rule, his team shall be disqualified.

6. The baton shall be passed within the take-over zone. The passing of the baton commences when it is first touched by the receiving athlete or guide-runner and is completed the moment it is in the hand of only the receiving athlete or guide-runner. In relation to the take-over zone, it is only the position of the baton that is decisive, and not the position of the bodies of the athletes. Passing of the baton outside the take-over zone shall result in disqualification.

COMMENT: In determining the position of the baton, it is the whole baton which must be considered. Umpires must be diligent to ensure that they observe any contact by the outgoing runner with the baton prior to the baton entering the takeover zone, particularly in 4x400m ambulant relays. If the outgoing runner even touches the baton prior to the baton being inside the zone, the team will be subject to disqualification. They must also ensure that the baton is only in the hand of the receiving athlete before it "leaves" the takeover zone.

For wheelchair relays (T33-34, T51-52 and T53-54), ambulant relays (T42-47, T61-64) and the 4x100m universal relay the Take-over shall be by a touch on any part of the body of either the incoming or outgoing athlete. The first touch must be within the Take-over Zone. Pushing the outgoing athlete to gain advantage during Take-over shall result in disqualification.

Note: For the 4x100m universal relay, the helmet worn by the wheelchair athlete is considered as a part of the body.

7. Athletes and guide-runners before and/or after the completion of the Take-over, should keep in their lanes or zones or maintain position until the course is clear to avoid obstruction to other athletes and guide-runners. Rule 18.5 and Rule 18.6 shall not apply to those athletes and guide-runners. If an athlete or guide-runner impedes a member of another team by running out of position or lane at the finish of his leg, Rule 18.2 shall be applied.

8. Baton Exchange for T11-13 Relays:

   a) Either the athlete or the guide-runner can carry the baton;

b) The baton exchange may take place between either guide-runners or athletes without restriction, except that the conditions of the method of guidance must be met;

c) A fair exchange is established when the baton carrier passes the baton to the baton receiver within the take-over zone;

d) Once the outgoing athletes and/or guide-runner leaves the take-over zone they can re-enter the take-over zone to receive the baton (i.e., if they go too early);

e) One (1) assistant per take-over zone will be allowed on the track to help with the positioning of any T12 athlete competing without a guide-runner. The assistant must leave the competition area prior to the start of the event and must remain in a position designated by the technical officials which does not interfere with the conduct of the race. In violation of this rule, the athlete shall be warned or disqualified subject to Rule 7.2.

9. If during the race an athlete takes or picks up the baton of another team, his team shall be disqualified. The other team should not be penalised unless an advantaged is obtained.

10. Each member of a relay team may run one leg only. Any four athletes and with their accompanying guide-runner(s) from among those entered for the competition, may be used in the composition of the relay team for any round. However, once a relay team has started in a competition, up to a total of four additional athletes who have been entered in the same race and their corresponding guide-runners may be used as substitutes in the composition of the team. If a team does not follow this Rule, it shall be disqualified.

    Note: The substitution of guide-runners shall not count towards the overall substitution of athletes.

11. The composition of a team and the order of running for a relay shall be officially declared no later than one hour before the published first call time (the time by which the athletes must be present in the Call Room) for the first heat of each round of the competition. Further alterations must be verified by a medical officer appointed by the LOC and may be made only until the final call time (the time at which the athletes are listed to depart the Call Room) for the particular heat in which the team is competing. The team shall compete as named and in the declared order. If a team does not follow this Rule, it shall be disqualified.

    At WPA Recognised Competitions (see Part B - 3.1.2) relays can be contested in accord with

clusters of Sports Classes and associated team composition requirements stipulated in the Table below.

Sports Class/es	Relay Team Composition Requirements
T11-13	Must include a minimum of one (1) Sports Class T11 athlete and can only include a maximum of one (1) Sports Class T13 athlete.
T33-34	Must include at least one (1) Sports Class T33 athlete
T35-38	Can only include a maximum of two (2) Sports Class T38 athletes
T42-47, T61-64	Can only include a maximum of two (2) Sports Class T46/47 athletes
T51-52	Must include at least one (1) Sports Class T51 athlete
T53-54	Must include at least one (1) Sports Class T53 athlete

Team composition, running order and eligible Sport Classes for the 4x100m universal relay are stipulated as follows:

- The team must include two (2) male and two (2) female eligible athletes.
- A maximum of two (2) athletes must be selected from the following Sports Classes: T13, T46/47, T38, T54.
- The remaining two (2) athletes must be selected from any of the other Sport Classes outlined in the table below.
- The running order must be in accordance with the below table:

Running Order	Eligible Classes
First Leg	T11-13
Second Leg	T42 – 47, T61 - 64
Third Leg	T35 -38
Fourth Leg	T33 - 34, T51- 54

COMMENT: In all relay races, strategy plays an important role. For example, some teams may select the fastest runner first, second fastest second etc., with the slowest runner finishing the race. Other teams could use a completely different strategy. For the 4x100m universal relay it is not that simple. Unlike the ambulant and wheelchair relay races, for the 4x100m universal relay there are additional requirements. Firstly, the team must be composed of two (2) male and two (2) female athletes. Secondly, a predetermined running order must be respected at all times during the race, which means that each leg shall be run by athletes from different Sport Classes as described in the above table. Finally, only a maximum of two (2) athletes may be selected from the following Sports Classes: T13, T46/47, T38, and T54. Therefore, depending on the team's strategy, they may choose none (0), one (1) or two (2) athletes from these classes. It is very important to note that regardless of the team's strategy, only a maximum of two (2) athletes from the previous Sport Classes can be selected. As an example, where a team has selected a T13 and T54 athlete for the First and Fourth Leg respectively, then for the Second and Third Legs they cannot select participants from Sport Classes T38 or T46/47.

12. The 4x100m including the 4x100m universal relay race shall be run entirely in lanes.

13. The 4x200m race may be run in any of the following ways:

    a) where possible, entirely in lanes (four bends in lanes)

    b) in lanes for the first two legs, as well as that part of the third leg up to the nearer edge of the break line described in the Rule 18.7, where athletes may leave their respective lanes (three bends in lanes),

    c) in lanes for the first leg up to the nearer edge of the break line described in Rule 18.7, where athletes may leave their respective lanes (one bend in lanes).

    Note: Where not more than four teams are competing and option (a) is not possible, it is recommended that option (c) should be used.

14. The 4x400m race may be run in either of the following ways:

    a) in lanes for the first leg, as well as that part of the second leg up to the nearer edge of the break line described in Rule 18.7 where athletes may leave their respective lanes (three bends in lanes),

    b) in lanes for the first leg up to the nearer edge of the break line described in Rule 18.7, where athletes may leave their respective lines (one bend in lanes).

Note: In relay races other than visually impaired and wheelchair, where not more than four teams are competing, it is recommended that option (b) should be used.

15. For all takeovers, athletes are not permitted to begin running or wheeling outside their take over zones and shall start within the zone. If an athlete does not follow this Rule, his team shall be disqualified.

16. The athletes/guide-runners in the third and fourth legs of the 4x400m relay race shall, under the direction of a designated official, place themselves in their waiting position in the same order (inside to out) as the order of their respective team members as they enter the last bend. Once the incoming athletes/guide-runners have passed this point, the waiting athletes/guide-runners shall maintain their order and shall not exchange positions at the beginning of the take-over zone. If an athlete/guide-runner does not follow this Rule, his team shall be disqualified.

    Note: In the 4x200m relay race (if this event is not run entirely in lanes) where the previous leg is not run in lanes, the athletes/guide-runners shall line up in the order of the start list (inside to out).

17. For wheelchair relays, relays for Sports Classes T11-13 (i.e., involving guide-runners) and 4x100m universal relay, where it is required for the relay to be run in lanes, each team shall be allocated two adjacent lanes. The athletes/guide-runners may use either of their two allocated lanes. The lines on the inner of the two allocated lanes shall be extended across the outer of the two allocated lanes to mark the distances of the stages and to denote the scratch lines. Changes will take place as for lanes 1, 3, 5 and 7. The extension-of-start and exchange box lanes should be done with tape of the same colour and width as the existing lane markings.

18. In any ambulant relay race, when lanes are not being used, including when applicable, in 4x200m and 4x400m, waiting athletes/guide-runners can take an inner position on the track as incoming team members approach, provided they do not jostle or obstruct another athlete/guide-runner so as to impede his progress. In 4x200m and 4x400m, waiting athletes/guide-runners shall maintain their order in accordance with Rule 23.16. If an athlete/guide-runner does not follow this Rule, his team shall be disqualified.

COMMENT: Chief Umpires must remain at the zone to which they and their Umpires have been assigned. Once the athletes are correctly placed in their lanes and the race has started, zone

Chief Umpires and those Umpires assigned to them are responsible for reporting any infringements of both these Rules as well as any other infringements particularly those under Rule 18.

19. In any wheelchair relay race, when lanes are not being used, including when applicable, in 4x200m and 4x400m, waiting athletes will be allocated two adjacent lanes, in their order in accordance with Rule 23.16. The waiting athletes may use either of these two lanes but must remain in these two lanes until after the takeover has been completed. In wheelchair relay races waiting athletes cannot take up an inner position or any other position than in the two allocated lanes. If an athlete does not follow this Rule, his team shall be disqualified.

20. In the case of relay events not covered by this Rule, the relevant competition regulations should specify any particular rules that should be applied and the method by which the relay should be conducted.

SECTION IV - FIELD EVENTS

Rule 24: General Conditions

(Rule 180)

Practice Trials at the Competition Area

1. At the competition area and before the beginning of the event, each athlete may have practice trials. In the case of throwing events, the practice trials will be in draw order and always under the supervision of the Judges.

COMMENT: Whilst in the past the Rules specified that there should be two practice trials for each athlete in throwing events, there is currently no such specification. Rule 24.1 should be interpreted as allowing whatever number of practice trials that may be included in the warm-up time available. Whilst for major events, two remains a standard practice, this is regarded as a minimum and should time be available and some or all or the athletes request additional practice trials, this can be permitted.

2. Once a competition has begun, athletes are not permitted to use, for practice purposes,
   a) The runway or take-off area;
   b) Implements;
   c) The circles or the ground within the sector with or without implements.

COMMENT: In the Long Jump or Triple Jump, athletes are not allowed to use the track for warm up when the track is being used for competition at the same time. They must stay within the immediate confines of the competition area and observe carefully the instructions of the Officials. As a Referee, an ITO must control the event site, and warn athletes who wander away from the competition area without permission. The issuance of a Yellow Card or Red Card is appropriate depending upon the circumstances.

The application of this Rule should not prevent an athlete from touching or preparing his selected implement in readiness for his trial provided that it does not endanger, delay or obstruct another athlete or other person. It is particularly important that the Judges interpret

this Rule reasonably so as to ensure the competition proceeds in an efficient manner and the athlete is able if he so chooses to take his trial immediately his time begins.

Markers

3.

a) In Field Events where a runway is used, markers shall be placed alongside it, except for High Jump where the markers can be placed on the runway. An athlete may use one or two markers (supplied or approved by the LOC) to assist him in his run-up and take-off. If such markers are not supplied, he may use adhesive tape but not chalk or similar substance nor anything that leaves indelible marks;

b) For throws made from a circle, an athlete may use one marker only. This marker may be placed only on the ground in the area immediately behind or adjacent to the circle. It must be temporary, in position only for the duration of each athlete's own trial, and shall not impair the view of the judges. No personal markers may be placed in or beside the landing area;

Note: Each marker shall be comprised of a single piece only.

COMMENT: If the ground is wet the adhesive tape used for High Jump can be fixed to the ground by drawing pins of several colours.

The requirement for each marker to be a single piece should be interpreted sensibly by the Referee. If for example the manufacturer has used two pieces of material to make a single marker which is intended to be used that way, this marker should be allowed. Similarly, if the athlete chooses to place both his markers in the same place, that is also acceptable. In the case of the High Jump, an athlete who tears the tape he is given into one or more pieces to make a single marker of a different shape to stand out more clearly, that should also be acceptable.

Performance Markers and Wind Socks

4.

a) A distinctive flag or marker may also be provided to mark the existing World Record and,

when appropriate, the existing Regional, National or Meeting Record.

b) One or more wind sock(s) should be placed in an appropriate position in all jumping events, Discus Throw and Javelin Throw, to show the athletes the approximate direction and strength of the wind.

Competing Order and Trials

5. Except where Rule 24.6 applies, the athletes shall compete in an order drawn by lot. If an athlete by his own decision makes a trial in an order different from that previously determined, Rule 2.13.5 and Rule 8.2 shall be applied. In the case of a warning the result of the trial (valid or failure) will stand. If there is a Qualification Round, there shall be a fresh drawing of lot for the final.

COMMENT: If an athlete, by his own decision, makes a trial in an order different from that previously determined, he shall be warned (or disqualified in case of a second infringement) according to Rule 2.13.5 and Rule 8.2, but the result of the trial (valid or failure) will be considered in the case of a warning.

6. Except for the High Jump and the Seated Throwing Events, no athlete shall have more than one trial recorded in any one round of trials of the competition.

   In all ambulant Field Events, except for the High Jump, where there are more than eight athletes, each athlete shall be allowed three trials and the eight athletes with the best valid performances shall be allowed three additional trials unless the applicable regulations provide otherwise.

COMMENT: In situations in the horizontal Field Events where there are more than eight athletes, only the eight athletes with the best valid performances are allowed any additional trial(s). This requires an athlete to have a measured mark recorded from a fair jump or throw in at least one of their first three trials. Where fewer than eight athletes achieve such a valid performance it is only those athletes who are allowed any additional trial(s) even though it will mean fewer than eight athletes proceeding.

   In the case of the last qualifying place, if two or more athletes have the same best performances, Rule 24.22 shall be applied. If it is thus determined that there has been a tie, the tying athletes shall be placed in the final allowed any additional trials. In the case of a tie

in High Jump for the last qualifying place, it shall be resolved as described in Rule 24.22 below.

In Seated Throwing Events, six consecutive trials shall be staged for each athlete, which for the avoidance of doubt may be held in two or more pools. In IPC Games and IPC Competitions (Part B - 3.1.2 (a) and (b)), it is recommended that the competing order for six consecutive trials shall be in reverse ranking order recorded from the relevant list of valid performances achieved during the predetermined period.

Where there are eight athletes or fewer, each athlete shall be allowed six trials unless the applicable regulations provide otherwise. If more than one fails to achieve a valid trial during the first three rounds of trials, such athletes shall compete in subsequent rounds of trials before those with valid trials, in the same relative order according to the original draw.

In both cases:

a) The competing order for any subsequent rounds of trials shall be in the reverse ranking order recorded after the first three rounds of trials unless the applicable regulations provide otherwise;

b) When the competing order is to be changed and there is a tie for any position, those tying shall compete in the same relative order according to the original draw.

Note (i): For Vertical Jumps, see Rule 25.

Note (ii): If one or more athlete(s) is permitted by the Referee to continue in a competition under protest in accordance with Rule 50.5, such athletes shall compete in all subsequent rounds of trials before all other athletes continuing in the competition and if more than one, in the same relative order according to the original draw.

Note (iii): The regulations of the relevant governing body may specify the number of trials (provided it is no more than six) and the number of athletes which may progress to each additional round of trials after the third.

Note (iv): In ambulant Field Event, the regulations of the relevant governing body may specify that the competing order be changed again after any further round of trials after the third.

COMMENT: This provision for a change in order after the fifth round in field events was removed in 2011. This in effect returns the Rule to the original situation that applied when change of

order was first introduced. It was considered that this provision did not add to the presentation of a competition, in fact in many cases detracting from it when the leading athlete decided there was no need to take his final trial.

Recording of Trials

7. Except in High Jump, a valid trial shall be indicated by the measurement taken.

   For the standard abbreviation and symbols to be used in all other case see Rule 2.20.3

Completion of Trials

8. The Judge shall not raise a white flag to indicate a valid trial until a trial is completed. The judge may reconsider a decision if he believes he raised the incorrect flag.

   The completion of a valid trial shall be determined as follows:

   a) In the case of Vertical Jumps, once the Judge has determined that there is no failure according to these Rules;

   b) In the case of Horizontal Jumps, once the athlete leaves the landing area in accordance with these Rules;

   c) In the case of throwing events for ambulant athletes, once the athlete leaves the circle or runway in accordance with these Rules;

   d) In the case of seated throwing events, once the implement has landed within the permitted zone.

COMMENT: This is why it is important for the judge in the field (for a Throwing Event) or landing area (for a horizontal jumping event) to ensure that there is a prism or mark in the case where a Chief Judge raises the incorrect flag in error.

Qualification Rounds

9. A Qualification Round shall be held in Field Events in which the number of athletes is too large to allow the competition to be conducted satisfactorily in a single round (final). Where a Qualification Round is held, all athletes shall compete in, and qualify through, that round

except that the body having the control over a competition may for one or more events authorise the conduct of additional Qualification Round(s) either at the same or at one or more earlier competition(s) to determine some or all of the athletes who shall be entitled to participate and in which round of the competition. Such procedure and any other means (such as e.g. achieving entry standards during a specified period, by specified placing in a designated competition or by rankings) by which an athlete is entitled to participate, and in which round of the competition, shall be set out in the regulations for each competition. Performances accomplished in a Qualification Round shall not be considered as part of the final.

COMMENT: While the performance will not count as part of the final, if a World Record is achieved and all other criteria as required for submission as a World Record, it can still be considered by WPA as a World Record performance.

10. The athletes shall normally be divided into two or more groups at random, but wherever possible representatives of each nation or team shall be placed in different groups. Unless there are facilities for the groups to compete at the same time and under the same conditions, each group should start its practice trials immediately after the previous group has finished.

11. It is recommended that, in competitions of more than three days, a rest day be provided between qualifying competitions and the finals in the High Jump.

12. The conditions for qualifying, the qualifying standard and the number of athletes in the final, shall be decided by the Technical Delegate(s). If no Technical Delegate(s) have been appointed the conditions shall be decided by the LOC. It is desirable that there should be at least 12 athletes in the final unless otherwise provided in the Regulations for the competition.

COMMENT: This essentially means that if there is a tie for the 12th position for a final, more than 12 may be selected for the final. While there is no "maximum" number for qualification, it would not be unusual for more than 12 athletes to be part of the final group.

13. In a Qualifying Round, apart from the High Jump, each athlete shall be allowed up to three trials. Once an athlete has achieved the qualifying standard, he shall not continue in the Qualifying Round.

14. In the Qualifying Round for the High Jump, the athletes, not eliminated after three

consecutive failures, shall continue to compete according to Rule 25.2 (including passing a trial) until the end of the last trial at the height set as the qualifying standard, unless the number of athletes for the final has been reached. Once it is determined that an athlete will be in the final, he shall not continue in the Qualifying Round.

15. If no athletes, or fewer than the required number of athletes, achieve the pre-set qualifying standard, the group of finalists shall be expanded to that number by adding athletes according to their performances in the qualifying competition. In the case of the last qualifying place, if two or more athletes have the same best distances or heights in the overall results of the competition Rule 24.22 shall be applied. If it is determined that there is still a tie, the tying athletes shall be placed in the final.

16. When a Qualifying Round for the High Jump is held in two simultaneous groups, it is recommended that the bar be raised to each height at the same time in each group. It is also recommended that the two groups be of approximately equal strength.

COMMENT: It is important when seeding High Jump qualifying groups that the requirements of Rule 24.10 and Rule 24.16 are both observed. The Technical delegates and the ITO/Referee must follow closely the progress of the qualifying rounds of the High Jump to ensure that on the one hand, the athletes must jump (or indicate that they are passing) as long as they are not eliminated under Rule 25.2 until the qualifying standard has been reached (unless the number of athletes for the final has been reached as defined in Rule 24.12) and on the other hand, any tie between athletes in the overall standings in the two groups is resolved according to Rule 25.9. Close attention must also be kept to the application of Rule 24.14 to ensure that athletes do not unnecessarily continue in the competition once it is certain that they will be in the final regardless of what may happen to the other athletes continuing to compete in the Qualification Round.

Time Allowed for Trials

17. The official responsible shall indicate to an athlete that all is ready for the trial to begin, and the period allowed for this trial shall commence from that moment.

    If after the time for a trial has begun, an athlete decides not to attempt that trial, it shall be considered a failure once the period allowed for the trial has elapsed.

The following times shall not be exceeded. If the time is exceeded, unless a determination is made under Rule 24.18, the trial shall be recorded as a failure:

Individual Events

Number of athletes left in the competition

	High Jump	Others Ambulant Events	Seated Throw Events
More than 3 (or for the very first trial of each athlete)	1min	1min	1min
2 or 3	1.5min	1min	1min
1	3min	-	-
Consecutive trials	2min	2min	1min

Note (i): For Seated Throws Events, an extra minute shall be added between the third and fourth throws.

COMMENT: In a practical sense, the Chief Judge or the Referee is in a position to allow additional time between throws if he determines that the athlete is not ready, or if the officials are not ready. For Seated Throwing the time clock should be initiated after the passing of the implement to the athlete and when the sector is ready, and officials are out of the way. This may require some sort of audible instruction from the Chief Judge to the athlete. When the athlete finishes the third throw, and the measurement is completed the time clock must be initiated for the one-minute break. During the one-minute break period the implement should not be provided to the athlete unless the athlete requests it. If the athlete asks for the implement before the one minute break has elapsed, then the time for the fourth throw shall commence immediately (i.e., at the moment the implement is handed to the athlete and when the sector is ready, and officials are out of the way).

Note (ii): A clock that shows the remaining time allowed for a trial should be visible to an athlete. In addition, an official shall raise and keep raised, a yellow flag, or otherwise indicate, during the final 15 seconds of the time allowed.

Note (iii): In the High Jump, any change in the time period allowed for a trial, except the time

specified for consecutive trials, shall not be applied until the bar is raised to a new height.

Note (iv): When only one athlete (who has won the competition) remains in High Jump and is attempting a World Record or other record relevant to the competition, the time limit shall be increased by one minute beyond those set out above.

COMMENT: This can be a troubling situation for Officials where more than one class of athlete has been combined for a specific competition. Where this is the case if an athlete in one class has "won the event" for his class he can ask for the bar to be moved to a height of his choosing if the Technical Specifications for the competition allow this or if the Technical Delegate determines that it is appropriate to allow this practice. This may disrupt the competition for the other class(es) within the competition.

Note (v): For the first trial of any athlete upon entering the competition, the time allowed for such trial will be 1 minute.

Note (vi): When calculating the number of athletes remaining in the competition this should include those athletes who could be involved in a jump off for first place.

Note (vii): In Field Events for Sport Classes 11 and 12 where athletes receive assistance from Callers or Escorts, the time allowed shall begin from the moment when the official responsible is satisfied that the athlete has completed the process of orientation. Should any athlete request verbal confirmation of the starting of the timing clock; an official shall give such confirmation.

COMMENT: Whilst the Judges should always use a system which notifies or calls the next athlete who is to take his trial plus the one who is to follow, this is essential when the time allowed for an athlete to take his trial is1 minute. They must also ensure that the competition area is completely ready for the next trial before calling the athlete and then starting the clock. The Judges and the Referee in particular must be fully aware of the current competition environment when deciding when to start the clock or to "time out" and call a failure. Particular circumstances which should be taken into account are the availability of the runway for an athlete's trial in High Jump and Javelin Throw (when Track Events are being held simultaneously in the same competition area) and the distance for athletes to walk to and through the cage to reach the circle to take their trial in discus Throw.

To be clear, the time limit will not change in the final round of any horizontal Field Event, once only 2 or 3 athletes remain to take their trials.

Note (viii): If the athlete loses orientation and requires to be re-oriented, the clock shall be stopped and only restarted (to include any elapsed time already recorded) once orientation has again been completed.

COMMENT: Additional time is not permitted in this situation. Time is simply suspended for the duration of the reorientation of the athlete.

Note (ix): In Seated Throwing Events, the time allowed shall begin from the moment when the throwing implement has been presented to the athlete after the throwing frame has been fixed to the throwing circle and the athlete has been positioned and strapped on that frame.

COMMENT: The time may be started earlier if the athlete has not been positioned within the allocated time period. And, where the athlete is ready, as indicated in the commentary under Note (i) on Rule 24.17, the time should start when the sector is free of officials.

It is also important to note that the count-down clock must be placed in such a position so that the athlete can see it.

Substitute Trials

18. If, for any reason beyond his control, an athlete is hampered in a trial and is unable to take it, or the trial cannot be correctly recorded, the Referee shall have the authority to award him a substitute trial or to re-set the time either partially or in full. No change in the order shall be permitted. A reasonable time shall be allowed for any substitute trial according to the particular circumstances of the case. In cases when the competition has progressed before the substitute trial is awarded, it should be taken before any other subsequent trials are then made.

COMMENT: There are several situations in which it may be appropriate for an athlete to be given a substitute trial including where because of procedural or technical failure a trial is not measured and it is not possible for a re-measurement to be accurately made. Whilst this should be avoided by good systems and backups, with technology being used more and more provision needs to be made for when things do go wrong. As no change in the competition order should be permitted (unless the problem is not immediately discovered and the competition has continued), the Referee must decide how long should be allowed for the substitute trial taking into account the specific circumstances of each particular case.

Absence during Competition

19. An athlete may not leave the immediate area of the event during the progress of the competition, unless he has the permission of, and is accompanied by, an official. If possible, a warning should be given first, but for subsequent instances or in serious cases the athlete shall be disqualified.

COMMENT: This should not be interpreted as preventing an athlete from crossing the track to speak to his coach.

Change of Competition Area

20. The Technical Delegate or the appropriate Referee shall have the authority to change the place of the competition if, in his opinion, the conditions justify it. Such a change should be made only after a round of trials has been completed.

    Note: Neither the wind strength nor its change of direction is sufficient condition to change the place nor time of the competition.

COMMENT: The phrase "round of trials" instead of "rounds" is designed to ensure a clear difference between a "round of trials" within a Field Event competition and a "round of the competition" (i.e., a Qualification Round or a final).

If the conditions make it impossible to complete a round of trials before a change of place or time is made, the technical delegate (through the Referee) or Referee should normally void those trials already completed in that round of trials (always depending on and evaluating the conditions and the results of the trials up to the time of the interruption) and recommence the competition at the beginning of that round of trials.

Result

21. Each athlete shall be credited with the best of all his trials, including in the case of High Jump, those achieved in resolving a tie for the first place.

Ties

22. Except for the High Jump, the second best performance of the athletes having the same best performances shall determine whether there has been a tie. Then, if necessary, the

third best, and so on. If the athletes are still equal following the application of this Rule 24.22, it shall be determined to be a tie.

Except for the High Jump, in the case of a tie for any place, including first place, the tie shall remain (See Rules 25.9, Rule 25.10).

Hopping Technique

23. For athletes in Classes T42-44 and T61-64 the hopping technique is permitted during the approach in Jumping Events.

A. VERTICAL JUMP

Rule 25: General Conditions

(Rule 181)

1. Before the competition begins, the Chief Judge shall announce to the athletes the starting height and the subsequent heights to which the bar will be raised at the end of each round of trials, until there is only one athlete remaining having won the competition, or there is a tie for first place.

COMMENT: Normally this is done at the Technical Meeting if it was not already included in the team manual or technical information concerning the event. It should be remembered that minor adjustments can still be made at the competition site by the Chief Judge to preserve the interests of all of the athletes.

Trials

2. An athlete may commence jumping at any height previously announced by the Chief Judge and may jump at his own discretion at any subsequent height. Three consecutive failures, regardless of the height at which any of such failures occur, disqualify from further jumping except in the case of a tie for first place.

   The effect of this Rule is that an athlete may pass his second or third trial at a particular height (after failing first or second time) and still jump at a subsequent height.

   If an athlete passes a trial at a certain height, he may not make any subsequent trial at that height, except in the case of a jump-off for first place.

3. Even after all the other athletes have failed, an athlete is entitled to continue jumping until he has forfeited his right to compete further.

4. Unless there is only one athlete remaining and he has won the competition:

   a) The bar should never be raised by less than 2cm in the High Jump after each round of trials, and;

   b) The increment of the raising of the bar should never increase.

These Rules shall not apply once the athletes still competing agree to raise it to a World Record height directly.

After an athlete has won the competition, the height or heights to which the bar is raised shall be decided by the athlete, in consultation with the relevant Judge or Referee.

Measurements

5. All measurements shall be made, in whole centimetres, perpendicularly from the ground to the lowest part of the upper side of the bar.
6. Any measurement of a new height shall be made before athletes attempt such height. A re-measurement should be made if the bar has been substituted. In all cases of Records, the Judges shall also re-check the measurement before each subsequent Record attempt if the bar has been touched since last measured.

Prosthetic Device(s)

7. For athletes competing in High Jump Events in sport classes T61-64, the use of prosthetic device(s) is optional. The relevant Official shall ensure that Rule 6.12.1(b) is observed.
   a) If the prosthetic device(s) is lost during the run-up then the athlete cannot continue without the prosthesis. The athlete shall fix/adjust the prosthetic device(s) and recommence the trial provided he is within the time allowed for the trial;
   b) If the prosthetic device(s) is lost during the process of jumping and the prosthetic device(s) does not clear the bar it shall be counted as a failure and recorded as such.

Crossbar

8. The crossbar shall be made of fiberglass, or other suitable material but not metal, circular in cross-section except for the end pieces. It shall be coloured so as to be visible to all sighted athletes. The overall length of the crossbar shall be 4.00m ±0.02m in the High Jump. The maximum weight of the crossbar shall be 2kg in the High Jump. The diameter of the circular part of the crossbar shall be 30mm±1mm.

The crossbar shall consist of three parts - the circular bar and two end pieces, each 30mm-35mm wide and 0.15-0.20m long for the purpose of resting on the supports of the uprights.

These end pieces shall have one clearly defined flat surface on which the bar rests on the crossbar supports.

This flat surface may not be higher than the centre of the vertical cross section of the crossbar. The end pieces shall be hard and smooth. They shall not be of, or covered with rubber or any other material which has the effect of increasing the friction between them and the supports.

The crossbar shall have no bias and, when in place, shall sag a maximum of 20mm.

Control of elasticity: Hang a 3kg weight in the middle of the crossbar when in position. It may sag a maximum of 70mm in High Jump.

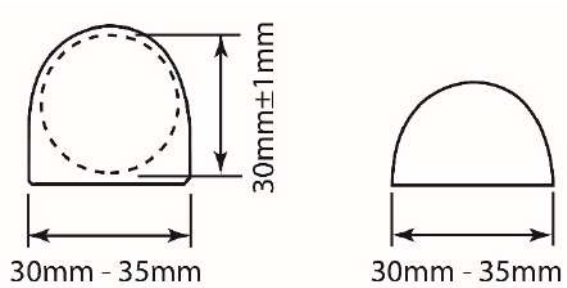

Figure 7 – Alternative ends for crossbar

Placings

9. If two or more athletes clear the same final height the procedure to decide the places will be the following:

   a) The athlete with the lowest number of jumps at the height last cleared shall be awarded the higher place;

   b) If the athletes are equal following the application of the above Rule the athlete with the lowest total of failures throughout the competition up to and including the height last cleared, shall be awarded the higher place;

c) If the athletes are still equal following the application of this Rule the athletes concerned shall be awarded the same place unless it concerns the first place;

d) If it concerns the first place a jump-off between these athletes, it shall be conducted in accordance with Rule 25.10, unless otherwise decided, either in advance according to the Technical Regulations applying to the competition, or during the competition by the Technical Delegate or the Referee if no Technical Delegate has been appointed. If no jump-off is carried out, including where the relevant athletes at any stage decide not to jump further, the tie for first place shall remain.

COMMENT: There are a number of ways in which a jump-off may be terminated:

a) by provision in advance of the competition set out in the regulations;

b) by decision during the competition by the technical delegate (or Referee if there is no technical delegate);

c) by decision of the athletes not to jump further prior to or at any stage of the jump-off.

Whilst any decision by the technical delegate or Referee not to conduct a jump-off should be made before the start of the event, there may be circumstances where this might not be possible such as where conditions at the place of competition make it impossible or undesirable to begin or continue with a jump-off. The Referee could use his powers under Rules 2.13 or Rule 24 to deal with this situation.

Jump-off

10. If there is a jump-off:

a) The athletes concerned must jump at every height until a decision is reached or until all of the athletes concerned decide not to jump further;

b) Each athlete shall have one jump at each height;

c) The jump-off shall start at the next height determined in accordance with Rule 25.1 after the height last cleared by the athletes concerned;

d) If no decision is reached the bar shall be raised if more than one athlete concerned were successful, or lowered if all of them failed, by 2cm;

e) If an athlete does not attempt a height in a jump-off he automatically forfeits any claim to the first place. If only one other athlete then remains he is declared the winner regardless of whether he clears that height.

High Jump – Example

What follows is a 'worked example' only

Heights announced by the Chief Judge at the beginning of competition:

1.75m; 1.80m; 1.84m; 1.88m; 1.91m; 1.94m; 1.97m; 1.99m…

Athlete	Heights (m)							Failures	Jump Off			Pos.
	1.75	1.80	1.84	1.88	1.91	1.94	1.97		1.91	1.89	1.91	
A	O	XO	O	XO	X-	XX		2	X	O	X	2
B	-	XO	-	XO	-	-	XXX	2	X	O	O	1
C	-	O	XO	XO	-	XXX		2	X	X		3
D	-	XO	XO	XO	XXX			3				4

A, B, C and D all cleared 1.88m.

The Rule regarding ties now comes into operation; the Judges add up the total number of failures, up to and including the height last cleared, i.e., 1.88m.

"D" has more failures than "A", "B" or "C", and is therefore awarded fourth place. "A", "B" and "C" still tie and as this concerns the first place, they shall have one more jump at 1.91m which is the next height after the height last cleared by the athletes tying.

As all the athletes tying failed, the bar is lowered to 1.89m for another jump-off. As only "C" failed to clear 1.89m, the two other tying athletes, "A" and "B" shall have a third jump-off at 1.91m which only "B" cleared and is therefore declared the winner.

COMMENT: When an athlete unilaterally decides to withdraw from a jump-off, the other athlete

(if only one remains) will be declared the winner in accordance with Rule 25.10 (e). It is not necessary for that athlete to attempt the applicable height. Where more than one athlete remains in the jump-off, the jump-off continues with those athletes, with the athlete who withdrew being placed according to his then finishing place, he having forfeited any right to any higher placing, including first, then remaining.

Extraneous Forces

11. When it is clear that the bar has been displaced by a force not associated with an athlete (e.g., a gust of wind):

    a) If such displacement occurs after an athlete has cleared the bar without touching it, then the trial shall be considered successful, or;

    b) If such displacement occurs under any other circumstance, a new trial shall be awarded.

Rule 26: High Jump

(Rule 182)

Competition

1. An athlete shall take off from one foot.

2. An athlete fails if:

    a) After the jump, the bar does not remain on the supports because of the action of the athlete whilst jumping, or;

    b) He touches the ground including the landing area beyond the vertical plane through the nearer edge of the crossbar, either between or outside the uprights with any part of his body, without first clearing the bar. However, if when he jumps, an athlete touches the landing area with his foot and in the opinion of the Judge, no advantage is gained; the jump for that reason should not be considered a failure.

    c) He touches the crossbar or the vertical section of the uprights when running up without jumping.

    Note (i): To assist in the implementation of this Rule a white line 50mm wide shall be

drawn (usually by adhesive tape or similar material) between points 3m outside of each upright, the nearer edge of the line being drawn along the vertical plane through the nearer edge of the crossbar.

Note (ii): Athletes in Sport Class T11 may touch the bar as an aid to orientation before commencing the run up. If, on so doing, the athlete dislodges the bar this will not count as an attempt.

Note (iii): Athletes in Sport Class T12 and T13 may place an appropriate visual aid on the bar.

COMMENT: For clarity, in the application of this Rule, the powers of the Referee under Rules 2.13 and Rule 24 should also be considered to reach a fair result for all athletes in the event. If it is not possible for any reason to finally determine any immediate oral protest before the competition continues, the athlete may, for example, be allowed to continue to compete "under protest" in order to preserve his rights.

Runway and Take-off Area

3. The minimum width of the runway shall be 16m and the minimum length of the runway shall be 15m except in IPC Games and IPC Competitions (see Part B - 3.1.2 (a) and (b)), where the minimum shall be 25m.
4. The maximum overall downward inclination in the last 15m of the runway and take-off area shall not exceed 1:167 (0.6%) along any radius of the semi-circular area centred midway between the uprights. The landing area should be placed so the athlete's approach is up the inclination.

   Note: Runways and take-off areas to the 2018/19 specifications remain acceptable.
5. The take-off area shall be generally level and free from any material inclination and shall be in accordance with Rule 26.4 and the World Athletics Track and Field Facilities Manual.

Apparatus

6. Any style of uprights or posts may be used, provided they are rigid. They shall have supports for the crossbar firmly fixed to them. They shall be sufficiently tall as to exceed the actual

height to which the crossbar is raised by at least 0.10m.

The distance between the uprights shall be not less than 4.00m no more than 4.04m.

7. The uprights or posts shall not be moved during the competition unless the Referee considers that either the take-off or landing area has become unsuitable. In such a case, the change shall be made only after a round of trials has been completed.

8. The supports shall be flat and rectangular, 40mm wide and 60mm long. They shall be firmly fixed to the uprights and immovable during the jump and shall each face the opposite upright. The ends of the crossbar shall rest on them in such a manner that, if the crossbar is touched by an athlete, it will easily fall to the ground, either forwards or backwards. The surface of the supports shall be smooth.

   The supports shall not be of, or covered with, rubber or with any other material which has the effect of increasing the friction between them and the surface of the crossbar, nor may they have any kind of springs.

   The supports shall be the same height above the take-off area immediately below each end of the crossbar.

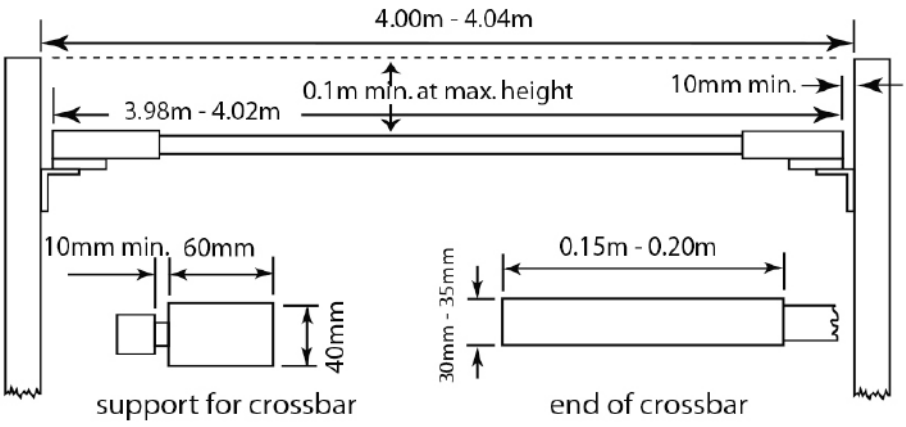

Figure 8 – High Jump uprights and crossbar

9. There shall be a space of at least 10mm between the ends of the crossbar and the uprights.

Landing Area

10. For IPC Games and IPC Competitions under Part B - 3.1.2 (a) and (b), the landing area shall be not smaller than 6m long x 4m wide x 0.7m high behind the vertical plane of the crossbar.

    Note: The uprights and landing area should also be designed so that there is a clearance of at least 0.1m between them when in use, to avoid displacement of the crossbar through a movement of the landing area causing contact with the uprights.

COMMENT: For other competitions, the landing area should measure not less than 5m long x 3m wide x 0.7m high.

Team of Officials

For a High Jump Event, it is recommended to allocate the available officials as follows:

1) The Chief Judge will watch over the whole of the event and verify the measurements. He must be provided with two flags - white to indicate if the trial is valid and red if it is a failure. He must place himself so as to manage two matters in particular:

    a) Frequently it happens that the cross-bar having been touched by an athlete trembles on the supports. The Chief Judge, depending on the position of the cross-bar, must decide when the vibrating of the bar must be stopped and the appropriate flag raised – particularly the special situations as covered in Rule 25.11 and

    b) Since the athlete may not touch the crossbar, the vertical section of the uprights or ground beyond the vertical plane of the nearer edge of the crossbar it is important to keep a watch on the position of the athletes feet in situations where when deciding not to complete a trial he runs to the side or goes "under" the bar.

2) Judges (1) and (2) on either side of the landing area and slightly standing back in charge of replacing the cross-bar when it falls and assisting the Chief Judge in applying the above Rules.

3) Judge - a recorder scoring the results sheet and calling each athlete (and the one who is to follow).

4) Judge in charge of the scoreboard (trial-number-result).

5) Judge in charge of the clock indicating to the athletes that they have a certain time to take their trial.

6) Judge in charge of athletes.

Note (i): This is the traditional setting-up of the officials. In major competitions, where a data system and electronic scoreboards are available, specialised personnel are certainly required. To be clear in these cases, the progress and scoring of a Field Event is followed by both the recorder and by the data system.

Note (ii): Officials and equipment must be placed in such a way as not to obstruct the athlete's way nor impede the view of the spectators.

Note (iii): A space must be reserved for a wind-sock to indicate the wind direction and strength.

B. HORIZONTAL JUMPS

COMMENT: These rules apply equally to both the Long Jump and Triple Jump, except for variations for T11 and T12 class athletes, set-up and jumping; in addition, the location (placement) of the wind gauge as well as timing (duration and starting of the equipment) of wind measurement are different for the Long and Triple Jump.

Rule 27: General Conditions

(Rule 184)

Runway

1. The minimum length of the runway shall be 40m, measured from the relevant take-off line to the end of the runway. It shall have a width of 1.22m ± 0.01m and shall be marked by white lines 50mm in width.

   Note: For all tracks constructed before 1 January 2004 the runway may have a width of maximum 1.25m. However, when such a runway is fully resurfaced, the lane width shall comply with this Rule.

2. The maximum lateral inclination of the runway should be 1:100 (1%) unless special circumstances exist which justify World Athletics providing an exemptions and in the last 40m of the runway the overall downward inclination in the direction of running shall not exceed 1:1000 (0.1%).

The Take-off Board and Take-off Area

3. The take-off shall be marked by a board sunk level with the runway and the surface of the landing area. The edge of the board which is nearer to the landing area shall be the take-off line. Immediately beyond the take-off line there may be placed a plasticine indicator board for the assistance of the Judges.

   Note: Where in construction of the runway and/or take-off board there was previously provision for the placement of a plasticine indicator board and such board is not used, this recess should be filled by a blanking board flush with the take-off board.

4. Construction. The take-off board shall be rectangular, made of wood or other suitable rigid material in which the spikes of an athlete's shoe will grip and not skid and shall measure 1.22m ± 0.01m long, 20cm (±2mm) wide and not more than 10cm deep. It shall be white. In order to ensure that the take-off line is clearly distinguishable and in contrast to the take-off board, the ground immediately beyond the take-off line shall be in a colour other than white.

5. The use of video or other technology, to assist the Judges in deciding the application of Rule 28.1, is strongly recommended at all levels of competition. However, if no technology is available, a plasticine indicator board may still be used.

   The plasticine indicator board shall consist of a rigid board, 10cm (±2mm) wide and 1.22m ± 0.01m long made of wood or any other suitable material and shall be painted in a contrasting colour to the take-off board. Where possible, the plasticine should be of a third contrasting colour. The board shall be mounted in a recess or shelf in the runway, on the side of the take-off board nearer the landing area. The surface shall rise from the level of the take-off board to a height of 7mm (±1mm). The edges shall be cut away such that the recess, when filled with plasticine the surface of the plasticine nearer to the take-off line shall be at an angle of 90° (see Figure 9).

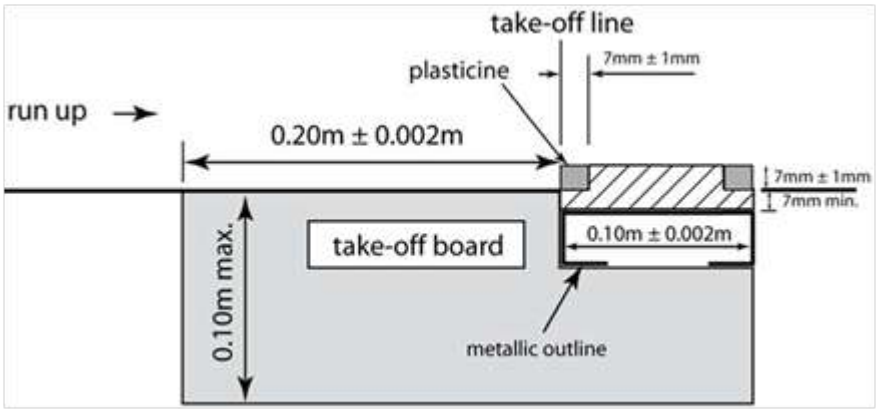

Figure 9 – Take-off board and plasticine indicator board

When mounted in this recess, the whole assembly shall be sufficiently rigid to accept the full force of the athlete's foot.

The surface of the board beneath the plasticine shall be of a material in which the spikes of an athlete's shoe will grip and not skid.

The plasticine can be smoothed off by means of a roller or suitably shaped scraper for the purposes of removing the footprint of an athlete.

6. For athletes in Sport Classes T11 and T12, the take-off area shall consist of a rectangle of 1.00m x 1.22m ± 0.01m as depicted in Figure 10, which must be prepared in such a way (by use of chalk, talcum powder, light sand, etc.) that the athlete leaves an impression on the area with his take-off foot. The edge of the take-off area which is nearer to the landing area shall be the scratch line.

Recommended minimum width of the landing area is 3.50m.

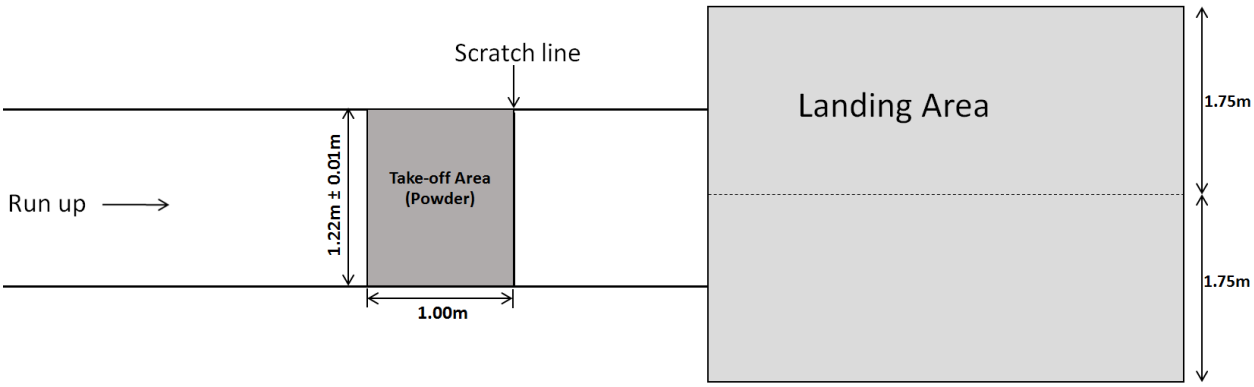

Figure 10 – Take-off Area for athletes in Sport Classes T11 and T12

The Landing Area

7. The landing area shall have a minimum width of 2.75m and a maximum width of 3m. It shall, if possible, be so placed that the middle of the runway, if extended, would coincide with the middle of the landing area.

Note (i): When the axis of the runway is not in line with the centre line of the landing area, a tape, or if necessary, two tapes, should be placed along the landing area so that the above is achieved (see Figure 11).

Note (ii): For Sport Classes T11-12 and the purposes of safety, it is strongly recommended that the minimum distance between the axis of the runway and the sides of the landing area be 1.75m (see Figure 10). If this recommendation cannot be met the Technical Delegate may

require additional safety measures.

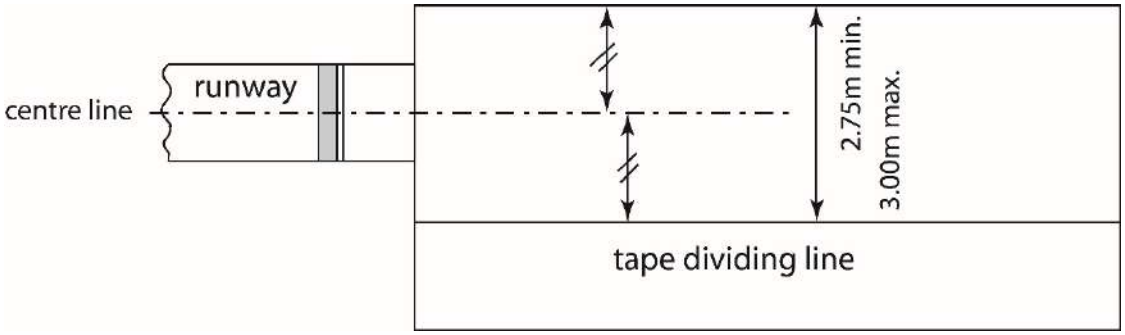

Figure 11 – Centralized Long Jump / Triple Jump landing area

COMMENT: Where new facilities are developed at which it is envisaged that athletes with vision impairment will compete in, at least one pit should be built with an increased width (3.50m instead of maximum 3.00m as in the World Athletics Rules).

8. The landing area should be filled with soft damp sand, the top surface of which shall be level with the take-off board.

Distance Measurements

9. The measurement of each Jump shall be made immediately after each valid trial (or after an immediate oral protest made under Rule 50.5). All jumps shall be measured from the nearest break in the landing area made by any part of the body or anything that was attached to the body at the time it made a mark to the take-off line, or take-off line extended. The measurement shall be taken perpendicular to the take-off line or its extension.

10. For athletes in Sport Classes T11 and T12 all jumps shall be measured from the nearest break in the landing area perpendicular to the nearest impression left by the take-off foot or its extension. Where an athlete does not take off from the take-off area, but before it, measurement will be made to the edge of the take-off area furthest from the landing area.

11. In all horizontal jumping events, distances shall be recorded to the nearest 0.01m, rounded down to the nearest 0.01m if the distance measured is not a whole centimetre.

COMMENT: As long as no irregularity has been committed, each trial must be measured whatever the distance reached, including for the reasons that other trial measurements may become critical in determining countbacks or whether an athlete will proceed to subsequent rounds. Except where Rule 50.5 is applied, under normal practice no trial during which an irregularity has been committed should be measured. Judges should carefully use their discretion in applying any alternate practice and usually only in special cases.

Unless video measuring is being used, for every valid trial a marker (usually metal) should be placed in a vertical position at the place of the imprint left by the athlete in the landing area nearest to the take-off line. The marker is passed through the loop at the end of the graduated metal tape so that the "zero" is on the mark. The tape should be pulled out horizontally taking care not to place it on any rise in the ground.

The measurement of the distance of a jump for Class T11 and T12

Chalk powder may be used for the powder in the 1.00m x 1.22m ± 0.01m take-off area.

Measuring the jump is made from the nearest impression left by the take-off foot (within the chalk powder), if within the area. If the take-off is made before the take-off area, the measurement is made from the edge of the take-off area furthest to the landing area (see below figure 12).

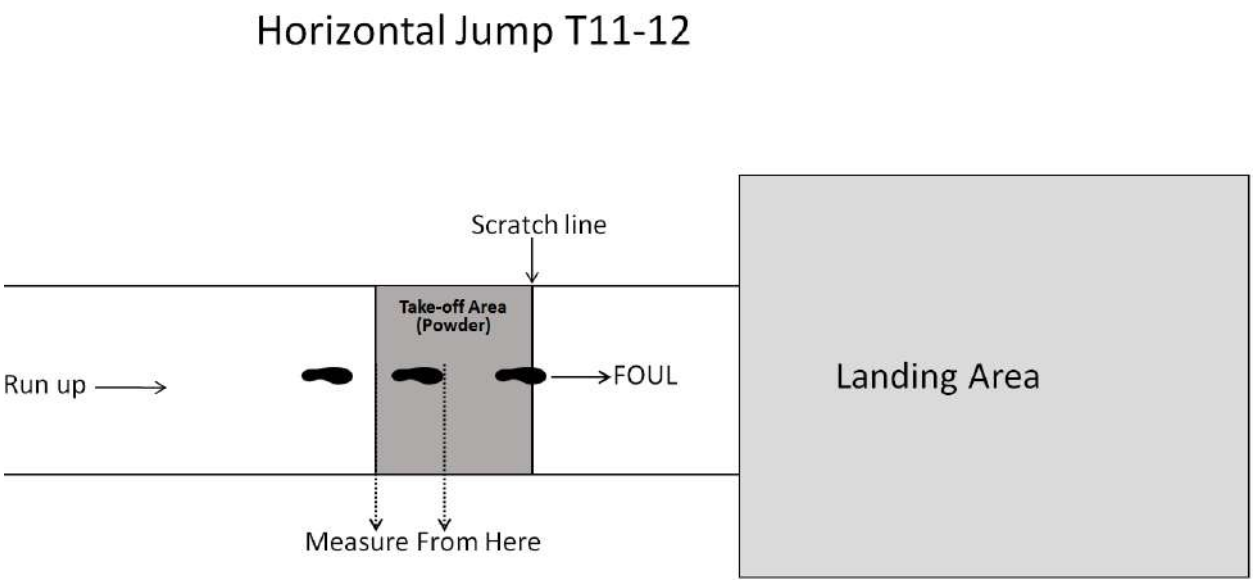

Figure 12 – Measurement of the distance in horizontal jumps for Class T11 and T12

Wind Measurement

12. The wind gauge shall be the same as described in Rule 18.11 and Rule 18.12. It shall be operated as described in Rules 18.14 and Rule 18.15 read as per Rule 18.16.

13. The relevant Field Events Referee shall ensure that the wind gauge is placed 20m from the take-off line. It shall be positioned 1.22m high and not more than 2m away from the runway.

    The wind velocity shall be measured for a period of 5 seconds from the time an athlete passes a mark placed alongside the runway, for the Long Jump 40m from the take-off line and for the Triple Jump 35m. If an athlete runs less than 40m or 35m, as appropriate, the wind velocity shall be measured from the time he commences his run.

Prosthetic Device(s)

14. For athletes competing in horizontal Jumping Events in sport classes T61-64, the use of prosthetic device(s) is optional. The relevant Official shall ensure that Rule 6.12.1(b) is observed.

    a) If the prosthetic device(s)is lost during the run-up then the athlete cannot continue without the prosthetic device(s). The athlete shall fix/adjust the prosthetic devices and recommence the trial provided he is within the time allowed for the trial;

    b) If the prosthetic devices are lost during the process of jumping and the mark where the prosthetic device(s) lands is the closest mark to the take-off board in the landing area, then that is the mark that the trial will be measured from;

    c) If the prosthetic device(s) lands outside the landing area, it shall be counted as a failure and recorded as such.

Rule 28: Long Jump

(Rule 185)

The Competition

1. An athlete fails if:

    a) he while taking off (prior to the instant at which he ceases contact with the take-off board

or ground), breaks the vertical plane of the take-off line with any part of his take-off foot/shoe or prosthetic device, whether running up without jumping or in the act of jumping, or;

b) he takes off from outside either end of the board, whether beyond or before the extension of the take-off line or;

c) he employs any form of somersaulting whilst running up or in the act of jumping or;

d) after taking off, but before his first contact with the landing area, he touches the runway or the ground outside the runway or outside the landing area; or

e) in the course of landing, he touches the border of, or the ground outside the landing area closer to the take-off line than the nearest break made in the sand or;

f) he leaves the landing area in any manner other than that described in Rule 28.2.

2. When leaving the landing area, an athlete's first contact by foot with its border or the ground outside shall be further from the take-off line than the nearest break in the sand.(Which may be any mark made on overbalancing completely inside the landing area or when walking back closer to the take-off line than the initial break on landing.)

   Note: This first contact is considered leaving.

3. An athlete shall not be regarded to have failed if:

   a) he runs outside the white lines marking the runway at any point; or

   b) except as described in Rule 28.1 (b), he takes off before reaching the board.

   c) under Rule 28.1 (b) a part of his shoe/foot is touching the ground outside either end of the take-off board (or take-off area for Sport Classes T11 and T12), before the take-off line; or

   d) if in the course of landing, he touches, with any part of his body, or anything attached to it at that moment, the border of, or the ground outside the landing area, unless such contact contravenes Rule 28.1 (d) or Rule 28.1 (e); or

   e) he walks back through the landing area after having left the landing area in the manner described in Rule 28.2 or;

Take-off line and Scratch line

4. The distance between the take-off line and the far end of the landing area shall be at least 10m.
5. The take-off line shall be placed between 1m and 3m from the nearer end of the landing area.
6. For athletes in Sport Classes T11 and T12, the distance between the scratch line and the far end of the landing area shall be at least 10m. The scratch line shall be placed between 1m and 3m from the nearer end of the landing area.

COMMENT: **Team of Officials**

For a Long Jump or Triple Jump Event, it is recommended to allocate the available officials as follows:

1) The Chief Judge will watch over the whole of the event.
2) Judge checking whether the take-off has been made correctly and measuring the trial. He must be provided with two flags - white to indicate if the trial is valid and red if it is a failure. When the jump has been measured, it is advised that the judge stands in front of the take-off board, holding the red flag, while the landing area is levelled and, if relevant, the plasticine board is replaced. A cone may be used instead or in addition. (In some competitions this position is assumed by the Chief Judge of the event.)
3) Judge at the landing point determining the position of the nearest break in the landing area to the take-off line, to insert the spike/prism and then, if a tape is being used, hold the tape on the 0. When video measuring is being used, no judge will normally be required on site for this purpose. When an optic system of measuring is being used on site, two judges are needed at the landing point, one to plant the marker in the sand, the other one to read the result on the optic apparatus.
4) Judge - a recorder scoring the results sheet and calling each athlete (and the one who is to follow).
5) Judge in charge of the scoreboard (trial-number-result).
6) Judge in charge of the wind-gauge positioned at a point 20 metres from the take-off board.

7) one or more Judges or assistants in charge of levelling the landing area after each trial.

8) Judge or an assistant in charge of replacing the plasticine.

9) Judge in charge of the clock indicating to the athletes that they have a certain time to take their trial.

10) Judge in charge of athletes.

Note (i): This is the traditional setting-up of the officials. In major competitions, where a data system and electronic scoreboards are available, specialised personnel are certainly required. To be clear in these cases, the progress and scoring of a Field Event is followed by both the recorder and by the data system.

Note (ii): Officials and equipment must be placed in such a way as not to obstruct the athlete's way nor impede the view of the spectators.

Note (iii): A space must be reserved for a wind-sock to indicate the wind direction and strength.

Rule 29: Triple Jump

(Rule 186)

The Rules for the Long Jump apply to the Triple Jump with the following additions:

The Competition

1. The Triple Jump shall consist of a hop, a step and a jump in that order.
2. The hop shall be made so that an athlete lands first on the same foot as that from which he has taken off; in the step he shall land on the other foot, from which, subsequently, the jump is performed.

   It shall not be considered a failure if an athlete, while jumping, touches the ground with the "sleeping" leg.

   Note: Rule 28.1 (d) does not apply to the normal landings from the hop and step phases.

Take-off Line and Scratch Line

3. The distance between the take-off line for men and the far end of the landing area shall be at

least 21m.

4. For WPA Recognised Competitions, there should be a separate take-off board for men and women. For athletes in Sport Classes T45-47 it is recommended that the take-off line will normally be set at 11m for men and 9m for women.

   For athletes in Sport Classes T11-13 it is recommended that the scratch line shall be the following distances:

   a) Sport Class T11 a minimum 9m;

   b) Sport Classes T12 and T13 a minimum 11m.

   Note: the exact distance from the scratch line to pit shall be determined for each competition in consultation with the Technical Delegate. For safety purposes, a different scratch line can be used if approved by the Technical Delegate.

5. Between the take-off board and the landing area there shall, for the step and jump phases, be a take-off area of 1.22m ± 0.01m wide providing firm and uniform footing.

   Note: For all tracks constructed before 1 January 2004, this take-off area may have a width of maximum 1.25m. However, when such a runway is fully resurfaced, the lane width shall comply with this Rule.

COMMENT: It should be noted that in the Triple Jump it is not a failure (for that reason alone) if the athlete:

a) Touches the white lines or the ground outside between the take-off line and the landing area;

   Or

b) If the athlete lands in the pit in the step phase through no fault of his own (i.e. the judges incorrectly indicated the take-off board) - in which such case the Referee would normally offer the athlete a substitute trial.

It is, however, a failure if the landing of the jump is not within the landing area.

C. THROWING EVENTS FOR AMBULANT ATHLETES

COMMENT: **Practice trials at the competition area**

Athletes in Field Events are entitled to warm-up at the competition area prior to the start of the competition.

For ambulant throwers, previously athletes were given two practice throws, there is now no such specification and athletes shall be allowed as much warm-up and practice throwing as the warm-up time permits. At IPC Games and IPC Competitions (see Part B - 3.1.2 (a) and (b)) the standard practice is still two Official practice throws are given and in the official throwing order as drawn by lot. See the differences for secured throwers in the rule respecting Seated Throwing Requirements (Rule 35.5).

Rule 30: General Conditions

(Rule 187)

Implements

1. The implements used (not otherwise unique to Para Athletics) shall comply with current World Athletics specifications. Only those implements which hold a current valid World Athletics Product Certificate of approval may be used at WPA Recognised Competitions (see Part B - 3.1.2).

   The Para Athletics Implement Weights lists are set out in Appendix 1.

   Note: In WPA Recognised Competitions under Part B - 3.1.2, athletes must only use the implement weights relevant to their Sport Class (as outlined in Appendix 1).

2. The weights of Implements listed in Appendix 1 and not otherwise identified by World Athletics specifications must be verified by the Technical Delegate to confirm the implement is compliant.

   Note: This refers to implements unique to Para Athletics that are not documented within World Athletics Rule 187 or related appendices.

3. Except as provided below, all such implements shall be provided by the LOC. The Technical

Delegate(s) may, based on the relevant Technical Regulations of each competition, allow athletes to use their own implements or those provided by a supplier, provided that such implements are World Athletics certified or, those implements that are not on the World Athletics list of certifiable implements which must be measured, verified and marked as approved by the LOC and approved by the Technical Delegate(s) before being made available to all athletes for use in competition. Such implements will not be accepted if the same model is already on the list of those provided by the LOC. Unless the Technical Delegate decides otherwise, not more than two implements may be submitted by any athlete for any throwing event in which he is competing.

Note: "World Athletics certified" implements may include older models that previously held a certificate but are not in production any longer.

COMMENT: It is becoming increasingly common for the LOC to provide a lesser range of implements than in the past (largely due to the cost of purchases). This increases the responsibility of Technical Managers and their assistants to closely check all personal implements presented for competitions - to ensure that they comply with the Rules as well as being on the World Athletics list of certified products. Implements which do not currently have but have previously had a World Athletics certificate may be accepted for competition if they comply with the Rules

4. No modification shall be made to any implements during the competition.

Assistance

5. The following shall be considered assistance and are therefore not allowed:

   a) The taping of two or more fingers together. If taping is used on the hands and fingers, it may be continuous provided that as a result no two or more fingers are taped together in such a way that the fingers cannot move individually. The taping should be shown to the Chief Judge before the event starts;

   b) The use of any device of any kind, including weights attached to the body, which in anyway provides assistance when making a trial;

   c) The use of gloves;

   d) The spraying or spreading by an athlete of any substance in the circle or on his shoes nor

the roughening of the surface of the circle.

Note: If the Judges are aware, they shall direct any athlete not complying with this rule to correct the situation. If the athlete does not, such trial(s) shall be a failure. If a trial is completed before the non-compliance is noticed, the Referee shall decide what action shall be taken. In all cases considered serious enough, Rule 2.13.5 and Rule 8.2 may also be applied.

6. The following shall not be considered assistance and are therefore allowed:

   a) The use by an athlete, in order to obtain a better grip, of a suitable substance on his hands only. A shot putter may use such substances on his neck.

   b) The placement by an athlete, in the Shot Put and Discus Throw, on the implement, of chalk or a similar substance. All substances used on the hands and on the implements shall be easily removable from the implement using a wet cloth and shall not leave any residue.

COMMENT: The importance here is that athletes may apply substances to their hands or on the implements, but they shall be easily removable from the implement using a wet cloth. If they cannot be removed easily using a wet cloth then the substances cannot be used under any circumstances. In practice the Officials are responsible for ensuring that the substance is removed from the implement prior to it being returned to the implement rack.

It is important to note that this applies to Shot Put and Discus only. A javelin thrower may not apply any substance to the implement. However, there is no provision which would restricts a javelin thrower from using any substance on his hands (but not the implement) that complies with Rule 30.6 (a).

   c) The use of taping on the hands and fingers that is not in contravention of Rule 30.5 (a).

Throwing Circle

7. The rim of the circle shall be made of band iron, steel or other suitable material, the top of which shall be flush with the ground outside. It shall be at least 6mm thick. The inside and top of the rim shall be white. The ground surrounding the circle may be concrete, synthetic, asphalt, wood or any other suitable material.

   The interior of the circle may be constructed of concrete, asphalt or some other firm but not

slippery material. The surface of this interior shall be level and 2cm±6mm lower than the upper edge of the rim of the circle.

In the Shot Put, a portable circle meeting these specifications is permissible.

8. The inside diameter of the circle shall be 2.135m±0.005m in the Shot Put and 2.50m±0.005mm in the Discus Throw. The rim of the circle shall be at least 6mm thick and shall be white.

   Note: The circular ring should preferably be coloured other than white so that the white lines required by Rule 30.8 are clearly visible.

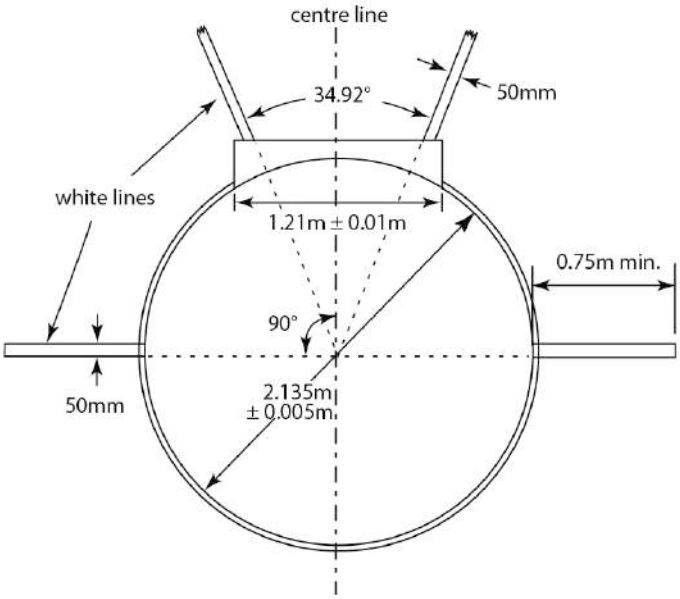

Figure 13 – Layout of Shot Put circle

A white line 50mm wide shall be drawn from the top of the rim extending for at least 0.75m on either side of the circle. The white line may be painted or made of wood or other suitable material. The rear edge of the white line shall form a prolongation of a theoretical line through the centre of the circle at right angles to the centre line of the landing sector.

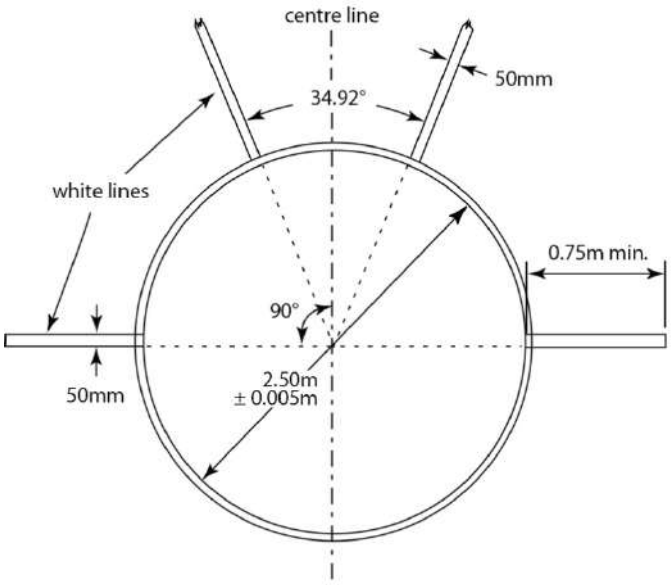

Figure 14 – Layout of Discus circle

Javelin Throw Runway

9. The minimum length of the runway shall be 30m except at the IPC Games and IPC Competitions (see Part B - 3.1.2 (a) and (b)), where the minimum shall be 33.50m. Where conditions permit, the minimum length should be 36.50m. It shall be marked by two parallel white lines 50mm wide and 4m apart. The throw shall be made from behind an arc of a circle drawn with a radius of 8m. The arc shall consist of at least a 70mm wide strip painted or made of wood or a suitable non-corrodible material like plastic. It shall be white and be flush with the ground. Lines shall be drawn from the extremities of the arc at right angles to the parallel lines marking the runway. These lines shall be white, at least 0.75m long and at least 70mm wide. The maximum lateral inclination of the runway should be 1:100 (1%) unless special circumstances exist which justify World Athletics providing an exemption and, in the last 20m of the runway the overall downward inclination in the direction of running shall not exceed 1:1000 (0.1%).

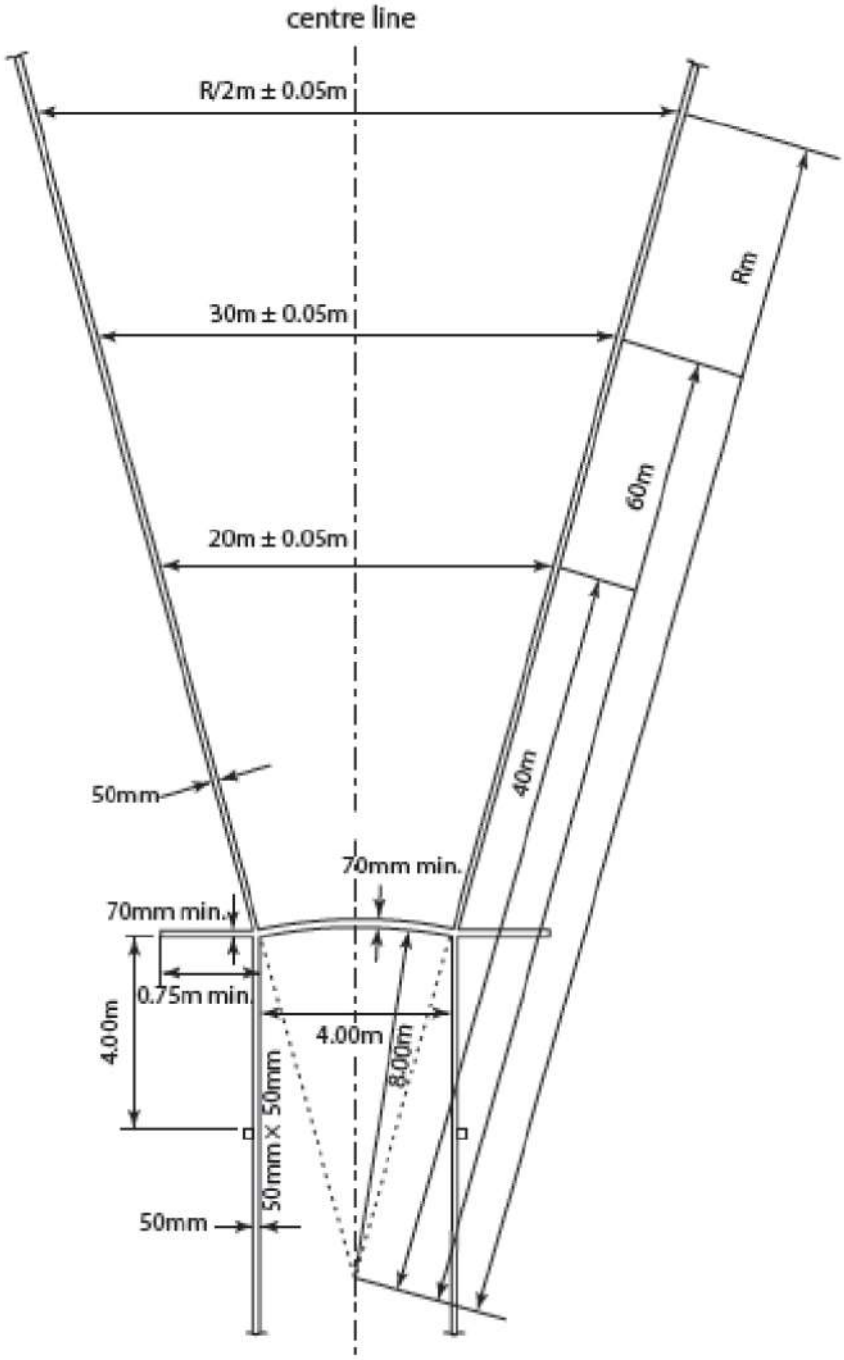

Figure 15 – Javelin Throw runway and landing sector (not to scale)

Landing Sector

10. The landing sector shall consist of cinders or grass or other suitable material on which the implement makes an imprint.

11. The maximum overall downward inclination of the landing sector, in the throwing direction, shall not exceed 1:1000 (0.1%).

12.

    a) Except for the Javelin Throw, the landing sector shall be marked with white lines 50mm wide at an angle of 34.92° such that the inner edge of lines, if extended, would pass through the centre of the circle.

    Note: The 34.92° sector may be laid out accurately by making the distance between the two points on the sector lines 20m from the centre of the circle 12m±0.05m *(20x0.60m) apart. Thus, for every 1m from the centre of the circle, the distance across shall be increased by 0.60m.*

    b) In the Javelin Throw, the landing sector shall be marked with white lines 50mm wide such that the inner edge of the lines, if extended, would pass through the two intersections of the inner edges of the arc, and the parallel lines marking the runway and intersect at the centre of the circle of which the arc is part (see Figure 15). The sector is thus about 28.96°.

COMMENT: The landing sector shall be of an even surface soft enough to ensure that the place of the initial fall of the implement can be clearly established by the Judges. The landing surface should not allow the implement bounce backwards thus creating a risk that the measuring point is obliterated.

Trials

13. In the Shot Put and Discus Throw, implements shall be thrown from a circle, and in the Javelin Throw, from a runway. In the case of trials made from a circle, an athlete shall commence his trial from a stationary position inside the circle. An athlete is allowed to touch the inside of the rim. In the Shot Put, he is also allowed to touch the inside of the stop board described in Rule 31.2.

COMMENT: There is no restriction on how, or from which direction, an athlete may enter the circle nor in the case of the shot put is there any restriction on making contact with the stop board during this process. The relevant requirement is that once inside he must adopt a stationary position before commencing his trial.

A stationary position means that an athlete having entered the circle to make their trial and before doing so adopts a stance in which both feet are simultaneously in firm contact with the ground inside the circle and with no contact with the top of the rim or the ground outside. Such contact to be sufficiently long in time to be visible to the judges. There is no requirement for the arms or hands of other parts of the athlete's body to be stationary.

14. It shall be a failure if an athlete in the course of a trial:

a) Releases the shot or the javelin other than as permitted under Rule 31.1 and Rule 33.1;

b) After he has stepped into the circle and begun to make a throw, touches with any part of his body the top (or the top inside edge) of the rim or the ground outside the circle;

Note: However, it will not be considered a failure if the touch is made without providing any propulsion and occurs during any first rotation at a point completely behind the white line which is drawn outside the circle running, theoretically, through the centre of the circle.

c) In the Shot Put, touches with any part of his body any part of the stop board other than its inner side (excluding its top edge which is considered to be part of the top);

COMMENT: Officials must be careful here to use appropriate judgement. For example, if an athlete's shoelace touches the top of the stop board it is not a failure, but if the bottom of his shoe touches the top of the stop board it is.

d) In the Javelin Throw, touches with any part of his body the lines which mark the runway or the ground outside.

Note (i): It shall be considered a failure if the discus strikes the far side of the cage (left side for a right-handed thrower when facing the landing sector or the right side for a left-handed thrower when facing the landing sector) after the release of the implement.

Note (ii): It will not be considered a failure if the discus strikes the near side of the cage (right side for a right-handed thrower when facing the landing sector or the left side for a left-handed thrower when facing the landing sector) after the release of the implement, then

lands within the landing sector outside the limits of the cage, provided that no other Rule is infringed, including Rule 30.16.

COMMENT: The limits of the cage shall be defined as the boundary formed by the cage and the gates, when in position, completed by an imaginary straight line drawn between the ends of the cage/gates closest to the landing sector.

It is clarified that the top inside edges of the rim of the circle and of the stop board are considered to be part of the top of the rim and stop board respectively. This means that should an athlete make contact with the top inside edge of either the rim or the stop-board then he will be considered thereby to have made a failure.

The addition of the Note to Rule 30.14 (b) applies to rotational techniques used by athletes in Shot Put and Discus Throw. It should be interpreted that any "incidental" touch of the top of the rim or the ground outside in respect of the back half of the circle during the first rotation should not of itself be regarded as a failure. However, it is clear that any technique which thereby obtains an advantage through leverage or propulsion would constitute a failure.

15. Provided that, in the course of a trial, the Rules relative to each throwing event have not been infringed, an athlete may interrupt a trial once started, may lay the implement down inside or outside the circle or runway and may leave the circle or runway.

    Note: All the moves permitted by this paragraph shall be included in the maximum time for a trial given in Rule 24.17.

COMMENT: In these circumstances, there is no restriction on how, or from which direction, an athlete may leave the circle or runway if he chooses to do. The relevant requirement is that no other Rule is or has already been infringed.

16. It shall be a failure if the shot, the discus, or the head of the javelin in contacting the ground when it first lands touches the sector line, the ground or any object (other than the cage as provided in the Note to Rule 30.14) outside the sector line.

17. It shall be a failure if the athlete leaves the circle or runway before the implement has touched the ground, or

    a) for throws made from a circle, if, when leaving the circle, the athlete's first contact with the top of the rim or the ground outside the circle is not completely behind the white line which is drawn outside the circle running, theoretically, through the centre of the circle.

Note: The first contact with the top of the rim or the ground outside the circle is considered leaving.

b) in the case of the Javelin Throw, if when leaving the runway, the athlete's first contact with the parallel lines or the ground outside the runway is not completely behind the white line of the arc or the lines drawn from the extremities of the arc at right angles to the parallel lines. Once the implement has touched the ground, an athlete will also be considered to have left the runway correctly, upon making contact with or behind a line (painted, or theoretical and indicated by markers beside the runway) drawn across the runway, four metres back from the end points of the throwing arc. Should an athlete be behind that line and inside the runway at the moment the implement touches the ground, he shall be considered to have left the runway correctly.

COMMENT: The second and third sentences in Rule 30.17 (b) are designed to speed up the judging process and not to create an additional method of calling a failure on the athlete. The purpose of the "4m marks" is solely to enable the Judges to raise the white flag and begin measuring the trial once the athlete retreats behind this point (in the same way as they would do if he had otherwise correctly left the runway). The only requirement is that there is no other reason for calling a failure and that the implement has touched the ground before the white flag is raised. Necessarily, if the athlete for whatever reason never progresses past the "4m marks" when making his throw then the flag can be raised once the implement has landed.

18. After each throw, implements shall be carried back to the area next to the circle or runway and never thrown back.

Measurements

19. In all throwing events, distances shall be recorded to the nearest 0.01m, rounded down to the nearest 0.01m if the distance measured is not a whole centimetre.

20. The measurement of each throw shall be made immediately after each valid trial (or after an immediate oral protest made under Rule 50.5):

a) from the nearest mark made by the fall of the shot or discus, to the inside of the circumference of the circle along a line to the centre of the circle;

b) in Javelin Throw, from where the head of the javelin first struck the ground to the inside

edge of the arc, along a line to the centre of the circle of which the arc is part.

COMMENT: As long as no irregularity has been committed, each trial must be measured whatever the distance reached, including for the reasons that other trial measurements may become critical in determining countbacks or whether an athlete will proceed to subsequent rounds. Except where Rule 50.5 is applied, under normal practice no trial during which an irregularity has been committed should be measured. Judges should carefully use their discretion in applying any alternate practice and usually only in special cases. Unless video measuring is being used, for every valid trial a marker (usually metal) should be placed in a vertical position at the place of the imprint left by the implement in the landing area nearest to the take-off line. The marker is passed through the loop at the end of the graduated metal tape so that the "zero" is on the mark. The tape should be pulled out horizontally taking care not to place it on any rise in the ground.

Rule 31: Shot Put

(Rule 188)

Competition

1. The shot shall be put from the shoulder with one hand only. At the time an athlete takes a stance in the circle to commence a put, the shot shall touch or be in close proximity to the neck or the chin and the hand shall not be dropped below this position during the action of putting. The shot shall not be taken behind the line of the shoulders.

   Note (i): Cartwheeling techniques are not permitted.

   Note (ii): For Sport Classes F33-34, F52-57 from start to finish, the movement of the shot shall be a straight, continuous putting action.

   Note (iii): For Sport Class F32, lateral movement of the shot away from the chin or neck during the putting action is allowed and the requirement for putting the shot in a straight, continuous putting action is waived provided that no other element of this rule is contravened.

COMMENT: Of importance is that the shot shall be "put" not "thrown". Taking the shot behind the line of the shoulders is how it looks when someone throws it rather than putting it. The hand cannot drop below the chin, the shot cannot be taken behind the line of the shoulders and the shot must not be thrown.

Stop Board

2. The stop board shall be white and made of wood or other suitable material in the shape of an arc so that the inner surface aligns with the inner edge of the rim of the circle and is perpendicular to the surface of the circle. It shall be placed so that its centre coincides with the centre line of the landing sector (Figure 13) and shall be firmly fixed to the ground or to the concrete surrounding the circle.

   Note: Stop boards to the 1983/84 World Athletics specifications remain acceptable.

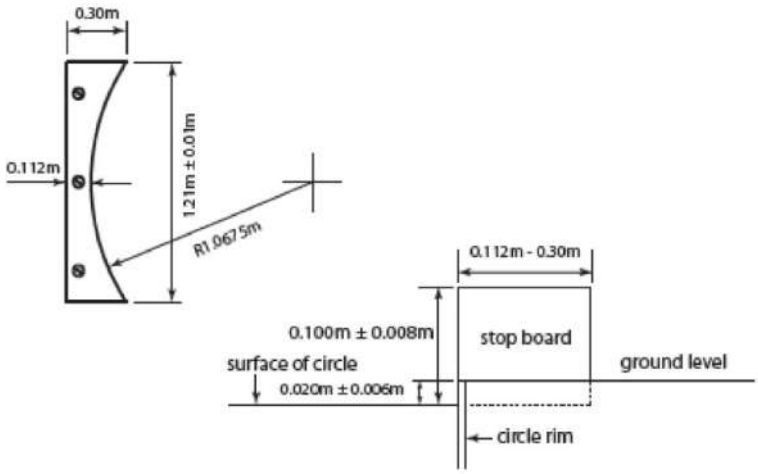

Figure 16 – Shot Put stop board (top and side view)

Measurements

3. The stop board shall measure 0.112m to 0.30m wide, with a chord of 1.21m ±0.01m for an arc of the same radius as the circle and 0.10m±0.008m high in relation to the level of the inside of the circle adjacent to the stop board.

Shot

4. The shot shall be of solid iron, brass or any metal not softer than brass, or a shell of such metal filled with lead or other solid material. It shall be spherical in shape and its surface finish shall be smooth.

   Information for manufacturers: to be smooth, the surface average height must be less than 1.6µm, i.e., a roughness number N7 or less.

5. The shot shall conform to the following specifications:

Shot						
Minimum weight for admission to competition and acceptance of a Record	2.000kg	3.000kg	4.000kg	5.000kg	6.000kg	7.260kg
Information for manufacturers						
Range for supply of implement for competition	2.005kg 2.025kg	3.005kg 3.025kg	4.005kg 4.025kg	5.005kg 5.025kg	6.005kg 6.025kg	7.265kg 7.285kg
Minimum Diameter	80mm	85mm	95mm	100mm	105mm	110mm
Maximum Diameter	100mm	110mm	110mm	120mm	125mm	130mm

COMMENT: Team of Officials

For a Shot Put event, it is recommended to allocate the available officials as follows:

1) The Chief Judge will watch over the whole of the event.

2) Two Judges checking whether the put has been made correctly and measuring the trial. One must be provided with two flags - white to indicate if the trial is valid and red if it is a failure. When the put has been measured, it is advised that the Judge stands in the circle holding the red flag, while the implement is returned, and the landing area is cleared. A cone may be placed in the circle instead. (In some competitions this position is assumed by the Chief Judge of the event.) Where EDM is not in use the second Judge should pull through and hold the measuring tape in such a way that it passes through the centre of the circle.

3) Judge immediately after the throw placing a marker indicating the point from which the trial is to be measured.

4) Judge positioning the spike/prism at the point where the marker has been placed ensuring the tape is on the zero mark.

5) Judge in charge of retrieving the implements and returning them to the implement stand or

placing them in the return chute.

6) Judge - a recorder scoring the results sheet and calling each athlete (and the one who is to follow).

7) Judge in charge of the scoreboard (trial-number-result).

8) Judge in charge of the clock indicating to the athletes that they have a certain time to take their trial.

9) Judge in charge of athletes.

10) Judge in charge of the implement stand.

Note (i): This is the traditional setting-up of the officials. In major competitions, where a data system and electronic scoreboards are available, specialised personnel are certainly required. To be clear in these cases, the progress and scoring of a Field Event is followed by both the recorder and by the data system.

Note (ii): Officials and equipment must be placed in such a way as not to obstruct the athlete's way nor impede the view of the spectators.

Rule 32: Discus Throw

(Rule 189)

Discus

1. The body of the discus may be solid or hollow and shall be made of wood, or other suitable material, with a metal rim, the edge of which shall be circular. The cross section of the edge shall be rounded in a true circle having a radius of approximately 6mm. There may be circular plates set flush into the centre of the sides.

   Alternatively, the discus may be made without metal plates, provided that the equivalent area is flat and the measurements and total weight of the implement correspond to the specifications.

   Each side of the discus shall be identical and shall be made without indentations, projections or sharp edges. The sides shall taper in a straight line from any point on a circle of a radius of 25mm to 28.5mm from the centre of the discus to the beginning of the curve

of the rim.

The profile of the discus shall be designed as follows. From the beginning of the curve of the rim the thickness of the discus increases regularly up to the maximum thickness D. This maximum value is achieved at a distance of 25 mm to 28.5mm from the axis of the discus Y. From this point up to the axis Y the thickness of the discus is constant. Upper and lower side of the discus must be identical; also the discus has to be symmetrical concerning rotation around the axis Y.

The discus, including the surface of the rim shall have no roughness and the finish shall be smooth and uniform throughout.

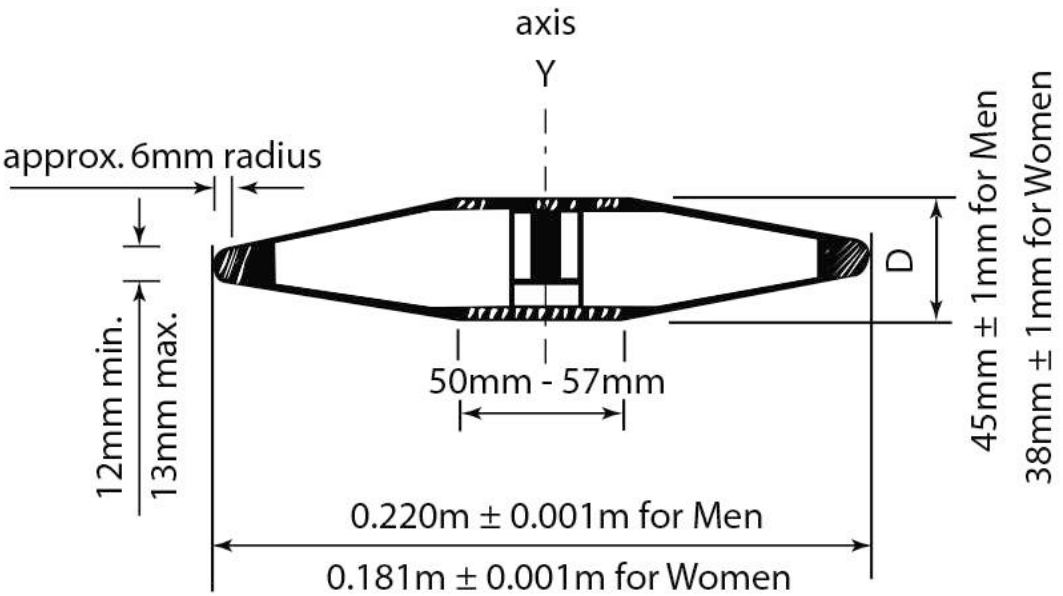

Figure 17 – Discus

2. The discus shall conform to the following specifications:

Discus					
Minimum weight for admission to competition and acceptance of a					
Record	0.750kg	1.000kg	1.500kg	1.750kg	2.000kg
Information for manufacturers					
Range for supply of implement for competition	0.755kg 0.775kg	1.005kg 1.025kg	1.505kg 1.525kg	1.755kg 1.775kg	2.005kg 2.025kg
Outside diameter of metal rim					
Min.	166mm	180mm	200mm	210mm	219mm
Max.	172mm	182mm	202mm	212mm	221mm
Diameter of metal plate or flat centre are					
Min.	50mm	50mm	50mm	50mm	50mm
Max.	57mm	57mm	57mm	57mm	57mm
Thickness of metal plate or flat centre area					
Min.	33mm	37mm	38mm	41mm	44mm
Max.	38mm	39mm	40mm	43mm	46mm
Thickness of metal rim (6mm from edge)					
Min.	10mm	12mm	12mm	12mm	12mm
Max.	13mm	13mm	13mm	13mm	13mm

COMMENT: **Team of Officials**

For a Discus Throw Event, it is recommended to allocate the available officials as follows:

1) The Chief Judge will watch over the whole of the event.

2) Two Judges checking whether the throw has been made correctly and measuring the trial. One must be provided with two flags – white to indicate if the trial is valid and red if it is a

failure. When the throw has been measured, it is advised that the Judge stands at the entrance to the cage holding the red flag, while the implement is returned, and the landing area is cleared. A cone may be placed at this point instead. (In some competitions this position is assumed by the Chief Judge of the event.) Where EDM is not in use the second Judge should pull through and hold the measuring tape in such a way that it passes through the centre of the circle.

3) Judge immediately after the throw placing a marker indicating the point from which the trial is to be measured. If the implement lands outside the sector either this Judge or the one with the spike/prism (whichever is closer to the line) should indicate this by holding his arm outstretched. No indication is required for a valid trial.

4) Judge positioning the spike/prism at the point where the marker has been placed ensuring the tape is on the zero mark.

5) one or more Judges or assistants in charge of retrieving the implements and returning them to the implement stand or placing them in the return device. Where a tape is used for measurement, one of these Judges or assistants should ensure that the tape measure is taut in order to ensure a correct measurement.

6) Judge - a recorder scoring the results sheet and calling each athlete (and the one who is to follow).

7) Judge in charge of the scoreboard (trial-number-result).

8) Judge in charge of the clock indicating to the athletes that they have a certain time to take their trial.

9) Judge in charge of athletes.

10) Judge in charge of the implement stand.

Note (i): This is the traditional setting-up of the officials. In major competitions, where a data system and electronic scoreboards are available, specialised personnel are certainly required. To be clear in these cases, the progress and scoring of a Field Event is followed by both the recorder and by the data system.

Note (ii): Officials and equipment must be placed in such a way as not to obstruct the athlete's way nor impede the view of the spectators.

Note (iii): A space must be reserved for a wind-sock to indicate the wind direction and strength.

Discus Cage

(Rule 190)

COMMENT: There are many variations on enclosures or cages for athletes with an impairment but safety for Officials, spectators and athletes is paramount. The Discus Cage is also used for club throw.

3. All discus throws shall be made from an enclosure or cage to ensure the safety of spectators, officials and athletes. The cage specified in this Rule is intended for use when the event takes place in the field of play with other events taking place at the same time or when the event takes place outside the field of play with spectators present. Where this does not apply, and especially in training areas, a much simpler construction may be satisfactory. Advice is available, on request, through national organisations or from the WPA Office.

4. The cage should be designed, manufactured and maintained so as to be capable of stopping a 2kg discus moving at a speed of up to 25 meters per second. The arrangement should be such that there is no danger of ricocheting or rebounding back towards the athlete or over the top of the cage. Provided that it satisfies all the requirements of this Rule, any form of cage design and construction can be used.

5. The cage should be U-shaped in plan as shown in Figure 18. The width of the mouth should be 6m, positioned 7m in front of the centre of the throwing circle. The end points of the 6m wide mouth shall be the inner edge of the cage netting. The height of the netting panels or draped netting at their lowest point should be at least 4m and it should be at least 6m for the 3m nearest the front of the cage on each side [from 1 January 2020].

   Provision should be made in the design and construction of the cage to prevent a discus forcing its way through any joints in the cage or the netting or underneath the netting panels or draped netting.

   Note (i): The arrangement of the rear panels/netting is not important provided the netting is a minimum of 3.00m away from the centre of the circle.

   Note (ii): Innovative designs that provide the same or better degree of protection and do not increase the danger zone compared with conventional designs may be World Athletics

certified.

Note (iii): The cage side particularly alongside the track may be lengthened and/or provided with (a) movable panel(s) and/or increased in height so as to provide greater protection to athletes competing on the adjoining track during a discus competition.

COMMENT: The netting must be fixed in a way that the width of the mouth is the same at each height of the netting.

6. The netting for the cage can be made from suitable natural or synthetic fibre cord or, alternatively, from mild or high tensile steel wire. The maximum mesh size shall be 44mm for cord netting and 50mm for steel wire.

   Note: Further specifications for the netting and safety inspection procedures are set out in the World Athletics Track and Field Facilities Manual.

7. The maximum danger sector for discus throws from this cage is approximately 69°, when used by both right and left handed throwers in the same competition (calculated by assuming that the discus is released from a circumscribed circle of 1.5m radius). The position and alignment of the cage in the field of play is, therefore, critical for its safe use.

   Note: the method used to determine the danger zone is illustrated in Figure 18.

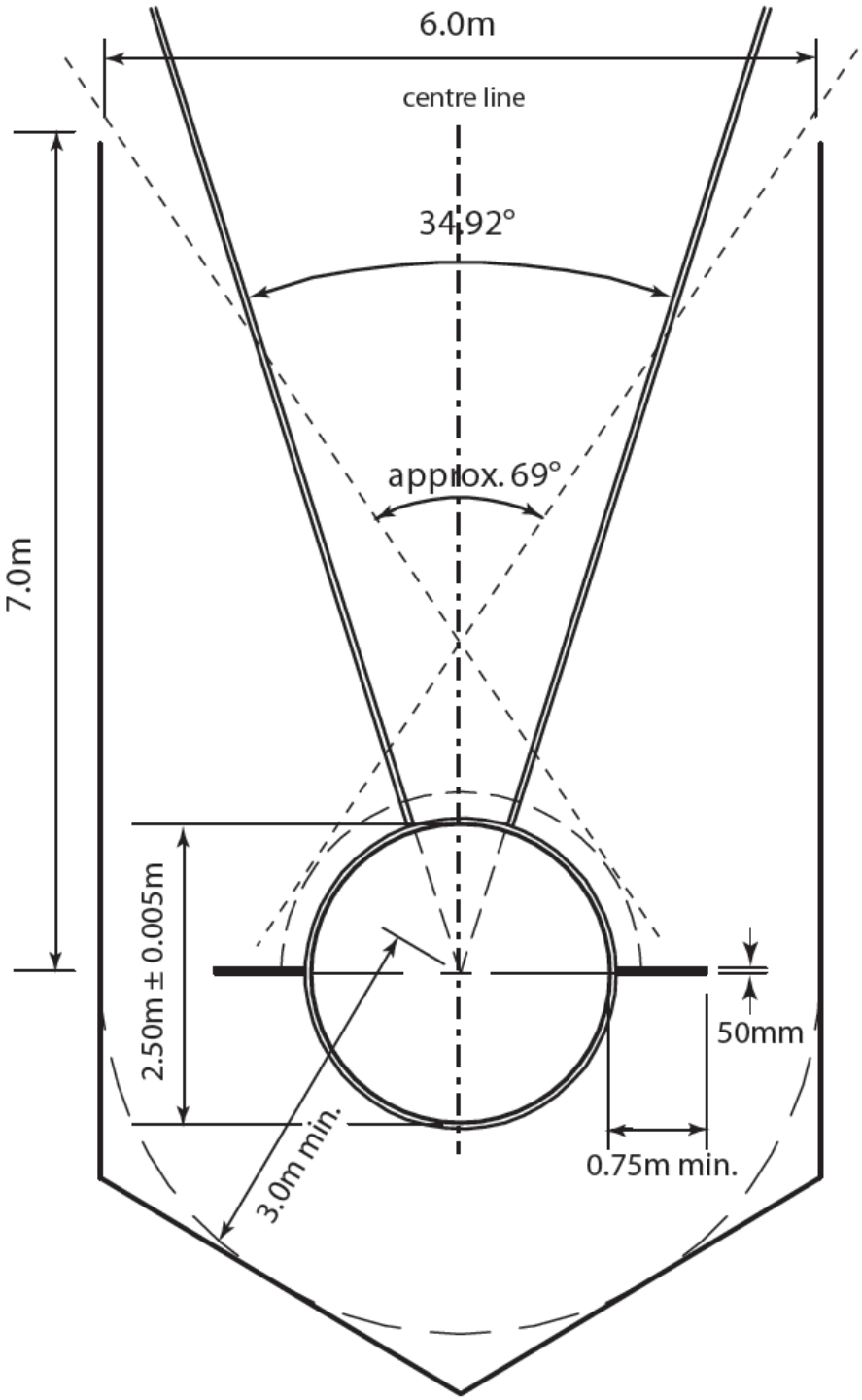

Figure 18 – Cage for Discus Throw only

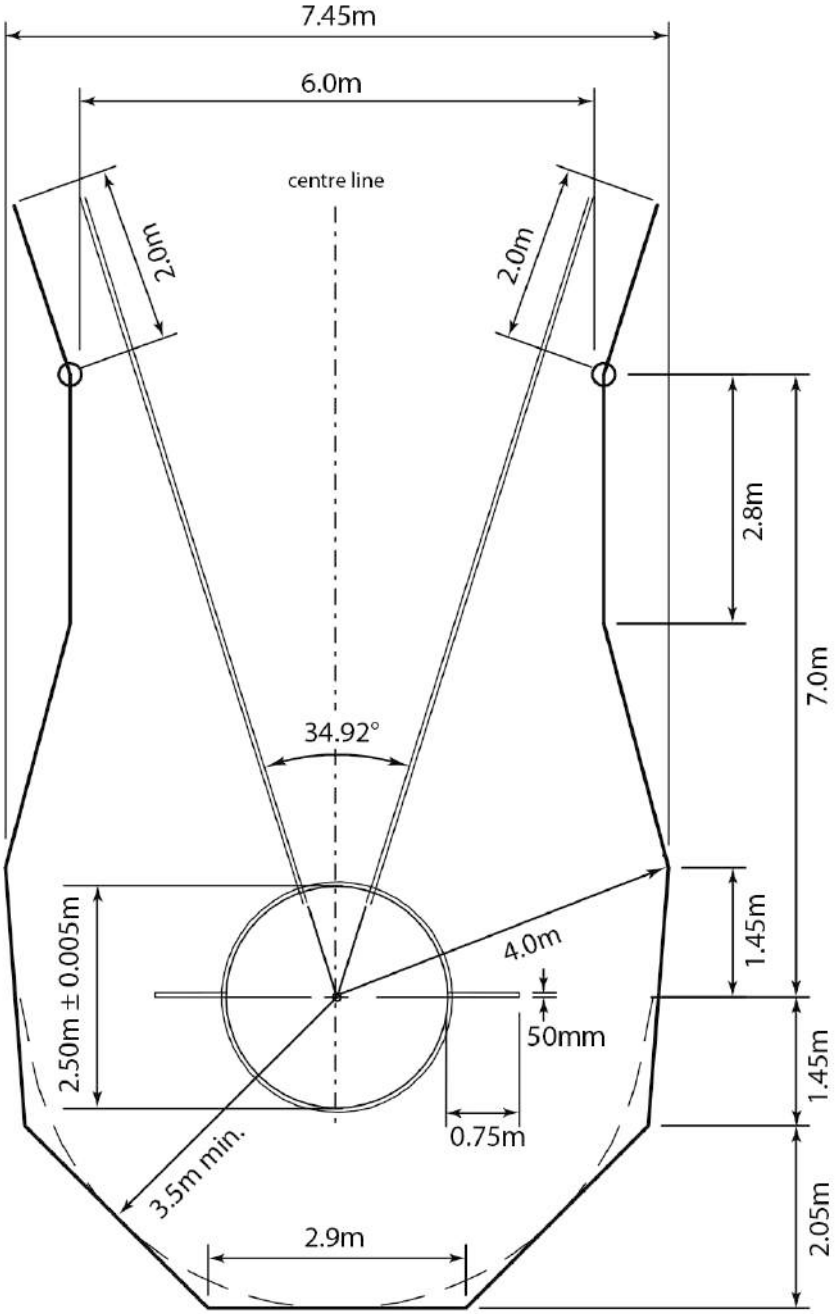

Figure 19 – Cage for Discus Throw with concentric circles

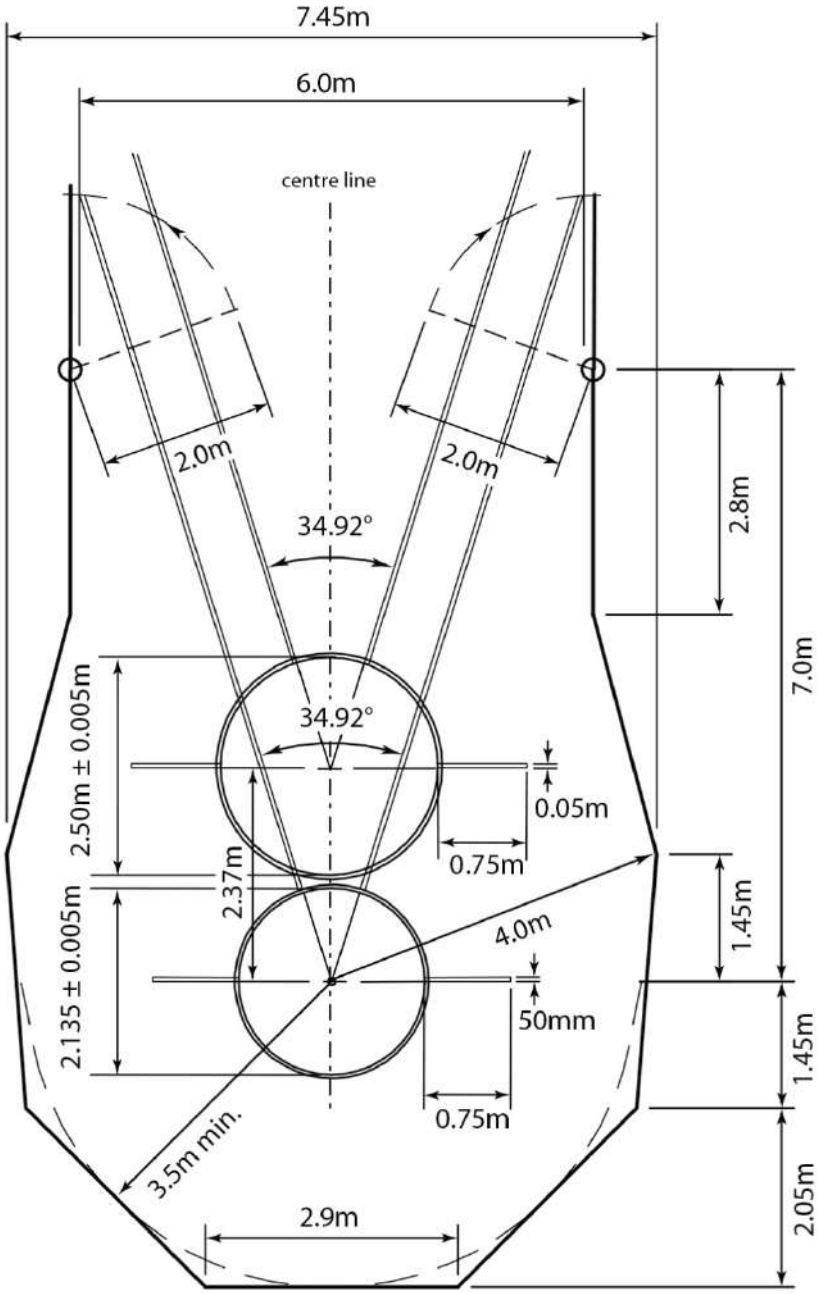

Figure 20 – Cage for Discus Throw with separate circles

Rule 33: Javelin Throw

(Rule 193)

Competition

1.

a) The javelin shall be held at the grip with one hand only. It shall be thrown over the shoulder or upper part of the throwing arm and shall not be slung or hurled. Non-orthodox styles are not permitted;

b) A throw shall be valid only if the metal head strikes the ground before any other part of the javelin;

c) Until the javelin has been thrown, an athlete shall not at any time turn completely around, so that his back is towards the throwing arc.

COMMENT: Previous references in the Rules to the "tip" of the javelin have been removed and are replaced by a generic reference to the head. This acknowledges that the shape of the head varies greatly, making it harder to separately define the tip. It means that Judges in determining whether the javelin has landed correctly in terms of Rule 30.16 and Rule 33.1 (b) and the reference point for measurement in terms of Rule 30.20 (b) now have a bigger area with which to assess. But the principles remain as before and there must be some angle on landing, however small, for the throw to be valid. Flat or "tail-first" landings are still to be red flagged.

2. If the javelin breaks during a throw or while in the air, it shall not count as a failure, provided the trial was otherwise made in accordance with this Rule. Nor shall it count as a failure if an athlete thereby loses his balance and as a result contravenes any part of this Rule. In both cases the athlete shall be awarded a new trial.

Javelin

3. The javelin shall consist of three main parts: a shaft, a head, and a cord grip.

4. The shaft may be solid or hollow and shall be constructed of metal or other suitable material so as to constitute a fixed and integrated whole. The surface of the shaft shall have no dimples or pimples, grooves or ridges, holes or roughness, and the finish shall be smooth and uniform throughout.

5. The shaft shall have fixed to it a metal head terminating in a sharp point. The head shall be constructed completely of metal. It may contain a reinforced tip of other metal alloy welded on to the front end of the head provided that the completed head is smooth and uniform along the whole of its surface. The angle of tip shall not exceed 40 degrees.
6. The cord grip, which shall cover the centre of gravity, shall not exceed the diameter of the shaft by more than 8mm. It may have a regular nonslip pattern surface but without thongs, notches or indentations of any kind. The grip shall be of uniform thickness.
7. The cross-section shall be regularly circular throughout (see Note (i)). The maximum diameter of the shaft shall be immediately in front of the grip. The central portion of the shaft, including the part under the grip, may be cylindrical or slightly tapered towards the rear but in no case may the reduction in diameter, from immediately in front of the grip to immediately behind, exceed 0.25mm. From the grip, the javelin shall taper regularly to the tip at the front and the tail at the rear. The longitudinal profile from the grip to the front tip and to the tail shall be straight or slightly convex (see Note (ii)), and there shall be no abrupt alteration in the overall diameter, except immediately behind the head and at the front and rear of the grip, throughout the length of the javelin. At the rear of the head, the reduction in the diameter may not exceed 2.5mm and this departure from the longitudinal profile requirement may not extend more than 0.3m behind the head.

   Note (i): Whilst the cross section throughout should be circular, a maximum difference between the largest and the smallest diameter at cross section of 2% is permitted. The mean value of these two diameters, at any nominated cross section, shall meet the specifications of a circular javelin in the tables hereunder.

   Note (ii): The shape of the longitudinal profile may be quickly and easily checked using a metal straight edge at least 500mm long and two feeler gauges 0.20mm and 1.25mm thick. For slightly convex sections of the profile, the straight edge will rock while being in firm contact with a short section of the javelin. For straight sections of the profile, with the straight edge held firmly against it, it must be impossible to insert the 0.20mm gauge between the javelin and the straight edge anywhere over the length of contact. This shall not apply immediately behind the joint between the head and the shaft. At this point it must be impossible to insert the 1.25mm gauge.

8. The javelin shall conform to the following specifications:

Javelin					
Minimum weight for admission to competition and acceptance of a Record (inclusive of the cord grip):					
	400g	500g	600g	700g	800g
Information for manufacturers: Range for supply of implement for competition					
	405g 425g	505g 525g	605g 625g	705g 725g	805g 825g
Overall length (L0)					
Min. Max.	1850mm 1950mm	2000mm 2100mm	2200mm 2300mm	2300mm 2400mm	2600mm 2700mm
Distance from tip of metal head to centre of gravity L1)					
Min. Max.	750mm 800mm	780mm 880mm	800mm 920mm	860mm 1000mm	900mm 1060mm
Distance from tail to centre of gravity (L2)					
Min. Max.	1050mm 1200mm	1120mm 1320mm	1280mm 1500mm	1300mm 1540mm	1540mm 1800mm
Length of metal head (L3)					
Min. Max.	200mm 250mm	220mm 270mm	250mm 330mm	250mm 330mm	250mm 330mm
Width of cord grip (L4)					
Min. Max.	130mm 140mm	135mm 145mm	140mm 150mm	150mm 160mm	150mm 160mm
Diameter of shaft at thickest point (in front of grip – D0)					
Min. Max.	20mm 23mm	20mm 24mm	20mm 25mm	23mm 28mm	25mm 30mm

9. The javelin shall have no mobile parts or other apparatus, which during the throw could change its centre of gravity or throwing characteristics.

10. The tapering of the javelin to the tip of the metal head shall be such that the angle of the point shall be not more than 40°. The diameter, at a point 150mm from the tip, shall not exceed 80% of the maximum diameter of the shaft. At the midpoint between the centre of gravity and the tip of the metal head, the diameter shall not exceed 90% of the maximum diameter of the shaft.

11. The tapering of the shaft to the tail at the rear shall be such that the diameter, at the midpoint between the centre of gravity and the tail, shall not be less than 90% of the maximum diameter of the shaft. At a point 0.15m from the tail, the diameter shall be not less than 40% of the maximum diameter of the shaft. The diameter of the shaft at the end of the tail shall not be less than 3.5mm.

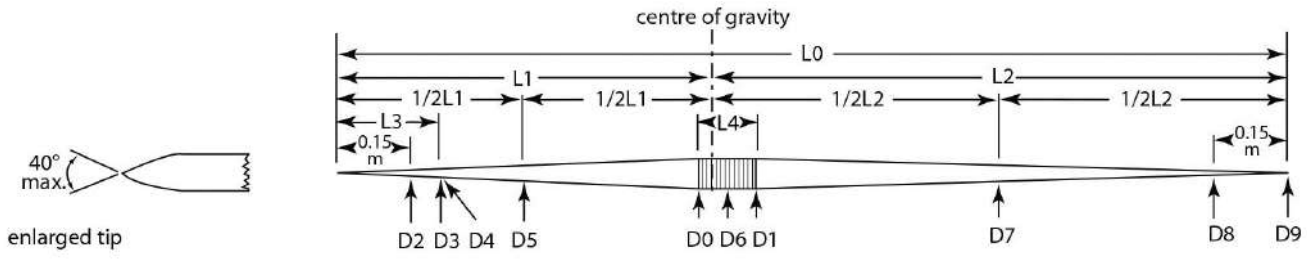

Figure 21 – International Javelin

Lengths		Diameters		Maximum	Minimum
L0	Overall	D0	In front of grip	–	–
L1	Tip to C of G	D1	At rear of grip	D0	D0-0.25mm
1/2L1	Half L1	D2	150mm from tip	0.8 D0	–
L2	Tail to C of G	D3	At rear of head	–	–
1/2L2	Half L2	D4	Immediately behind head	–	D3-2.5mm
L3	Head	D5	Halfway tip to C of G	0.9 D0	–
L4	Grip	D6	Over grip	D0+8mm	–
		D7	Halfway tail to C of G	–	0.9 D0
		D8	150mm from tail	–	0.4 D0
C of G	Centre of Gravity	D9	At tail	–	3.5mm
Note: All measurements of diameters must be to at least 0.1 mm.					

COMMENT: **Team of Officials**

For a Javelin Throw Event, it is recommended to allocate the available officials as follows:

1) The Chief Judge will watch over the whole of the event.
2) Two Judges checking whether the throw has been made correctly and measuring the trial. One must be provided with two flags – white to indicate if the trial is valid and red if it is a failure. When the throw has been measured, it is advised that the Judge stands on the runway holding the red flag, while the implement is returned, and the landing area is cleared. A cone may be placed on the runway instead. (In some competitions this position is assumed by the Chief Judge of the event.)
3) Where EDM is not in use the second Judge should pull through and hold the measuring tape in such a way that it passes through the 8m point marked on the runway.
4) one or two Judges immediately after the throw placing a marker indicating the point from which the trial is to be measured. If the implement lands outside the sector either this Judge or the one with the spike/prism (whichever is closer to the line) should indicate this by holding his arm outstretched. An appropriate indication is also required if these Judges determine that the implement has not landed "head first". It is recommended that some form of signal other than flags in used for this purpose. No indication is required for a valid trial.
5) Judge positioning the spike/prism at the point where the marker has been placed ensuring the tape is on the zero mark.
6) one or more Judges or assistants in charge of retrieving the implements and returning them to the implement stand or placing them in the return device. Where a tape is used for measurement, one of these Judges or assistants should ensure that the tape measure is taut in order to ensure a correct measurement.
7) Judge - a recorder scoring the results sheet and calling each athlete (and the one who is to follow).
8) Judge in charge of the scoreboard (trial-number-result).
9) Judge in charge of the clock indicating to the athletes that they have a certain time to take their trial.

10) Judge in charge of athletes.

11) Judge in charge of the implement stand.

Note (i): This is the traditional setting-up of the officials. In major competitions, where a data system and electronic scoreboards are available, specialised personnel are certainly required. To be clear in these cases, the progress and scoring of a Field Event is followed by both the recorder and by the data system.

Note (ii): Officials and equipment must be placed in such a way as not to obstruct the athlete's way nor impede the view of the spectators.

Note (iii): A space must be reserved for a wind-sock to indicate the wind direction and strength.

D. THROWING EVENTS FOR SEATED ATHLETES

Rule 34: General Conditions

Official Implements

1. The implements used (not otherwise unique to Para Athletics) shall comply with current World Athletics specifications. Only those implements which hold a current valid World Athletics Product Certificate of approval may be used at WPA Recognised Competitions (see Part B - 3.1.2).

   The Para Athletics Implement Weights lists are set out in Appendix 1.

   Note: In WPA Recognised Competitions under Part B - 3.1.2, athletes must only use the implement weights relevant to their Sport Class (as outlined in Appendix 1).

2. The weights of Implements listed in Appendix 1 and not otherwise identified by World Athletics specifications must be verified by the Technical Delegate to confirm the implement is compliant.

   Note: This refers to implements unique to Para Athletics that are not documented within World Athletics Rule 187 or related appendices.

3. Except as provided below, all such implements shall be provided by the LOC. The Technical Delegate(s) may, based on the relevant Technical Regulations of each competition, allow athletes to use their own implements or those provided by a supplier, provided that such implements are World Athletics certified or, those implements that are not on the World Athletics list of certifiable implements which must be measured, verified and marked as approved by the LOC and approved by the Technical Delegate(s) before being made available to all athletes for use in competition. Such implements will not be accepted if the same model is already on the list of those provided by the LOC.

4. No modification shall be made to any implements during the competition.

Assistance

5. The following shall be considered assistance and are therefore not allowed:

   a) The taping of two or more fingers together. If taping is used on the hands and fingers, it may be continuous provided that as a result no two or more fingers are taped together in such a way that the fingers cannot move individually. The taping should be shown to the Chief Judge before the event starts.

   b) The use of any device of any kind, including weights attached to the body, which in anyway provides assistance when making a trial;

   c) Use of gloves except for athletes in Classes F31-33 and F51-53 that is not in contravention Rule 34.6 (d);

6. The following shall not be considered assistance and are therefore allowed:

   a) The use by an athlete, in order to obtain a better grip, of a suitable substance on his hands only. Shot putters may use such substances on their neck;

   b) The placement by an athlete, in the Shot Put, Discus Throw and Club Throw, on the implement, of chalk or a similar substance. All substances used on the hands and on the implements shall be easily removable from the implement using a wet cloth and shall not leave any residue;

      COMMENT: It is important to note that this applies to Shot Put, Discus Throw and Club Throw only. A javelin thrower may not apply any substance to the implement. However, there is no provision which would restrict a javelin thrower from using any substance on his hands (but not the implement) that complies with Rule 34.6 (a).

   c) The use of taping on the hands and fingers that is not in contravention of Rule 34.5 (a);

   d) The use of gloves that is not in contravention of Rule 34.5 (c);

   Athletes in Sport Classes F31-33 and F51-53 (i.e., quadriplegic athletes) use strapping or a glove on their non-throwing hand and anchor/attach that hand to any part of the throwing frame within the vertical plane of the throwing circle.

Throwing Circle

7. The rim of the circle shall be made of band iron, steel or other suitable material, the top of which shall be flush with the ground outside. The ground surrounding the circle may be concrete, synthetic, asphalt, wood or any other suitable material.

   The interior of the circle may be constructed of concrete, asphalt or some other firm but not slippery material. The surface of this interior shall be level and 2cm±6mm lower than the upper edge of the rim of the circle.

   In the Shot Put, a portable circle meeting these specifications is permissible.

   Surface of Tie-down Devices (Sport Classes F31-34 and F51-57)

   a) WPA Approved Tie-down Devices must be used to conduct seated throwing events at WPA Recognised Competitions (see Part B - 3.1.2);

   b) At IPC Games and IPC Competitions (see Part B - 3.1.2 (a) and (b)) the interior of the Throwing Circle should be constructed of concrete, asphalt or a similar non-slippery material;

   c) Where portable WPA Approved Tie-down Devices are being used the surface must provide similar grip to a concrete throwing surface (e.g., coated in gritty paint OR covered in "gritty tape");

   d) Movable platforms can be used at the discretion of the Technical Delegate. The platform does not have to be a full circle, but in these circumstances the front arc or semi-circle must be designed to give the same effect of throwing from a circle, diameter 2.135m to 2.5m and not alter the angle of the sector.

COMMENT: The throwing platforms are becoming more available and more widely used. It is most important to ensure that they are adequately secured to the ground so that even the largest and heaviest of athletes cannot dislodge them during the throwing action.

8. All Seated Throwing Events (Shot Put, Discus Throw, Javelin Throw and Club Throw) should be conducted from a circle with diameter of 2.135m±0.005m or 2.50m±0.005m, using a 34.92 degree sector. The rim of the circle shall be at least 6mm thick and shall be white. The use of movable platforms meeting these specifications is permissible.

   Note (i): The circular ring should preferably be coloured other than white so that the white lines required by this Rule are clearly visible.

Note (ii): Discus Throw and Club Throw shall be conducted from a cage.

Trials and Measurement

9. In all Seated Throwing Events, it shall be a failure:

   a) if the shot, the discus, the club, or the head of the javelin in contacting the ground when it first lands touches the sector line, or the ground or any object (other than the cage) outside the sector line.

   Note: It will not be considered a failure if the discus strikes the near side of the cage (right side for a right-handed thrower when facing the landing sector or the left side for a left-handed thrower when facing the landing sector) after the release of the implement, then lands within the landing sector outside the limits of the cage, provided that no other Rule is infringed, including Rule 30.16.

   b) if an athlete touches any holding straps outside the vertical plane of the rim of the throwing circle.

10. In all Seated Throwing Events, distances shall be recorded to the nearest 0.01m, rounded down to the nearest 0.01m if the distance measured is not a whole centimetre.

11. The measurement of each throw shall be made immediately after each valid trial (or after an immediate oral protest made under Rule 50.5):

    a) from the nearest mark made by the fall of the shot or discus to the inside of the circumference of the circle along a line to the centre of the circle;

    b) from where the head of the javelin first struck the ground to the inside of the circumference of the circle along a line to the centre of the circle;

    c) from the first point of contact by any part of the club to the inside of the circumference of the circle along a line to the centre of the circle.

Rule 35: Seated Throwing Requirements

(Sport Classes F31-34, F51-57)

[Note to officials: for the purpose of interpreting this rule and other rules regarding the shape,

dimensions, construction and other characteristic of competition equipment, the 'fundamental principles' set out in Part B – 7.1 regarding 'Technology and Equipment' should be observed.]

1. Throwing Frame Specifications:

   a) The maximum height of the seat surface, including any cushioning, shall not exceed 75 cm;

   b) Each throwing frame must have a seat which is square or rectangular in shape and each side at least 30 cm in length. The seat surface must be level or with the front higher than the back (i.e. inclined backwards).

      Note: The front is the plane furthest from the athlete's spine with the athlete in a seated position regardless of the direction of the athlete in relation to the landing area.

   c) The throwing frame may incorporate side, front and back rests for the purposes of safety and stability. They can either be made of non-elastic fabric (e.g., non-elastic canvas) or be a rigid construction that does not move (e.g., rigid steel or aluminium). The backrest may incorporate cushioning that must not exceed 5 cm in thickness.

      Note: The structure of the throwing frame shall not impede the view of judges.

   d) The side, front and back rest should not incorporate springs or movable joints or any other feature that could assist with propulsion of the throwing implement;

   e) The throwing frame may have a rigid vertical bar. The vertical bar must be a single, straight piece of material without curves or bends, and with a cross-sectional profile that is circular or square, not oval or rectangular. It must not incorporate springs or movable joints or any other feature that could assist with propulsion of the throwing implement;

      Note (i): It is understood that most materials will flex and distort to some degree under pressure and it will not be practical or economically viable to engineer a solution whereby all flexing is totally eliminated. However, flexing must not be clear to the naked eye and in the opinion of the technical officials the spirit of these rules and Part B - 7 is being breached.

      Note (ii): The vertical bar may have layers of tape and/or any other suitable material to provide a better grip. The thickness of the tape or other alternative material must not result in any unfair advantage exceeding athlete's physical prowess.

Note (iii): For the avoidance of doubt, an athlete shall be entitled to hold on to any component of the throwing frame for stability.

COMMENT: There is no minimum or maximum length requirement for the vertical bar. The bar must be vertical however some deviation from "exactly perpendicular to the ground" may be permitted. Such deviation should not usually exceed 5 degrees from the vertical. An additional piece which acts as support to the vertical bar (similar to the example illustrated below) is permitted and strongly encouraged to mitigate against potential flexing of the vertical bar. The vertical bar, or any of its supports, may not protrude outside the throwing circle or platform.

The use of a plum bob will assist in determining if any part of the throwing frame or vertical bar is not in conformity with this rule when placed in the throwing circle or platform.

It should also be noted that at IPC Games and IPC Competitions a courtesy pre-check of throwing frames is conducted to enable athletes to make any necessary amendments prior to final check at the entry to the Call Room.

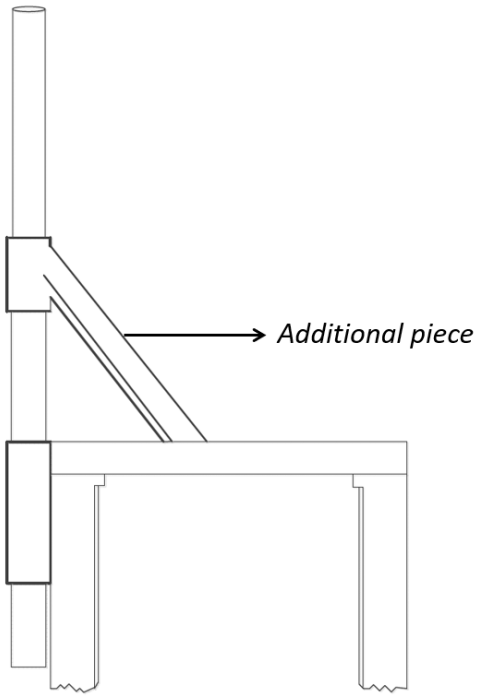

Figure 22 – Additional piece to mitigate the potential flexing of the vertical bar

f) No part of the throwing frame, including any vertical bar, shall move (save for incidental

movement that cannot reasonably be eliminated) during the throwing action.

The corner(s) of, or notches in, the seat surface may be cut to accommodate side, front, back rests and/or a vertical bar into the main throwing frame. The size of these cuts shall not be appreciably more than the space needed to insert the rests or the vertical bar in them. The overall shape of the seat shall remain square or rectangular.

g) Footplates, if used, are for support and stability only.

h) A daily wheelchair that satisfies these criteria is acceptable (including the requirement that it must not move during the throwing action).

2. Throwing Frame Measurement and Inspection

Throwing Frames will be measured and inspected in the Call Room or at the competition area prior to the commencement of the event. Once it has been measured and inspected an athlete's Throwing Frame must not be taken from the competition area before the start of the event. Throwing Frames can be re-examined by the officials before, during or after the event.

Note: Measurement will always take place without the athlete sitting in the frame.

3. Athlete's Responsibility for Throwing Frame Compliance

It is the responsibility of the athlete to ensure that their Throwing Frame conforms to the requirements stipulated in Rule 35.1. No event shall be delayed while an athlete makes adjustments to their throwing Frame. If an athlete fails to comply with this Rule, then the athlete will not be permitted to start the event and shall be shown in the results as "DNS" in accordance with Rule 6.16.

4. Positioning of the Throwing Frame

When positioning and securing the throwing frame inside the competition area all parts of the throwing frame, vertical bar and footplates must remain inside the vertical plane of the rim of the circle throughout the trial.

5. Time Allocation for Securing Frames

A reasonable amount of time will be permitted for an athlete's throwing frame to be secured in the circle before the athlete attains a seated position on the throwing frame. The maximum time allowed is for athletes to secure themselves to the chair and have as many

warm-up throws as time permits is:

a) 4 minutes for Sports Classes F32-34 and F54-57, or

b) 5 minutes for classes F31 and F51-53.

Note (i): Timing should begin at the time the chair is oriented, secured to the throwing platform and made available to the athlete to secure themselves into position.

COMMENT: Timing for securing the athlete into the throwing chair and conducting practice throws begins when the throwing frame is situated in the circle or throwing platform. If the time in this rule elapses prior to securing the athletes into the Throwing chair, the time for the first trial should commence as it would if the athlete was secured.

If the athlete is using a day chair that meets the requirements for a throwing frame the time starts when the day chair is placed and strapped in the throwing circle or on the throwing platform.

6. Tie-down Device Failure (Sport Classes F31-34, F51-57)

   If a tie-down device should break or fail during the execution of a throw then the overseeing official should:

   a) If the athlete does not fail, offer the athlete the option of re-taking that trial (i.e., if the athlete is happy with the distance and they haven't failed then the athlete has the option of counting the affected trial), or;

   b) If the athlete fails, then the trial should not be counted and the athlete should be allowed to retake the affected trial.

Rule 36: Seated Throwing Technique, Lifting and Failure

1. In Seated Throw Events, all athletes (Sport Classes F31-34, F51-57) shall throw implements from a Throwing Frame in a seated position. The seated position is defined as follows:

   a) The athlete must sit so that both legs are in contact with the seat surface from the back of the knee to the back of the buttock (Ischial tuberosity). For athletes with lower limb above and through knee amputation, the residual length of the leg(s) must be in contact

with the seat surface till the back of the buttock (Ischial tuberosity).

b) This sitting position must be maintained throughout the throwing action until the implement has landed. Strapping across the upper thighs and or pelvis is encouraged.

Note (i): The intention of this rule is to minimise the contribution of the legs to the athlete's performance.

Note (ii): If an athlete presents with anatomical limitation that prevents adherence to the above requirements, then an assessment shall be made by WPA in advance of the event. WPA shall establish a process for such exception to be granted so that the athlete is throwing within the spirit of the rules.

Note (iii): For the purposes of this rule, the back of the buttock refers to the most posterior part of the buttock which remains in contact with the seat surface when the athlete is seated and bends as far forward as possible at the hips, so that chest goes towards the knees and the ischial tuberosities remain in contact with the seat surface.

Note (iv): It is not necessary for both knees to be in contact with the same plane of the vertical edge of the seat surface provided that all other requirements of this rule are satisfied to the effect that the athlete may "straddle" the corner of the vertical edge of the seat surface with one leg on adjacent planes.

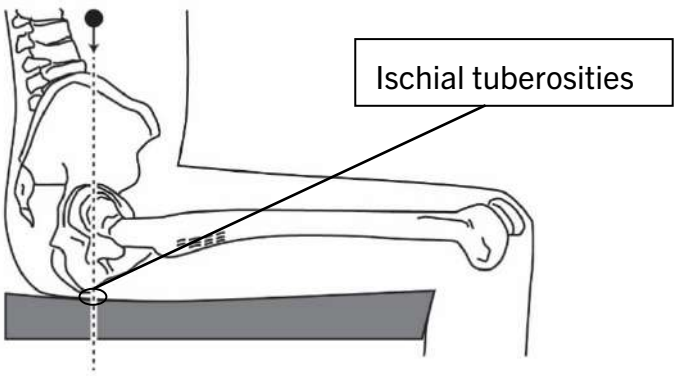

Figure 23 Ischial tuberosities

2. An athlete shall commence his trial from a stationary seated position.

3. It shall be a failure if an athlete moves from the seated position from the time the athlete takes the implement into the starting position of the trial until the implement has landed.

   Note: It is not a failure as long as any part of the back of the knee is in contact with the seat during the throwing action until the implement has landed.

COMMENT: It is important to note that if one or both knees slide forward and lose contact with the seat surface during the throwing action, it shall be considered a failure.

Team of Officials

For Seated Throw Events, it is recommended to allocate the available officials as follows:

1) The Chief Judge will watch over the whole of the event.

2) Judges checking whether the trial has been made correctly including:

   a) observing if the knee "slides forward" off the seat cushion;
   b) observing whether the seated position has been maintained throughout the trial in accordance with the Rules; and
   c) observing whether the vertical holding bar flexes and measuring the trial. One must be provided with two flags - white to indicate if the trial is valid and red if it is a failure. Where EDM is not in use the second judge should pull through and hold the measuring tape in such a way that it passes through the centre of the circle.

3) Judge immediately after the trial placing a marker indicating the point from which the trial is to be measured.

4) Judge positioning the spike/prism at the point where the marker has been placed ensuring the tape is on the zero mark.

5) Judge in charge of retrieving the implements and returning them to the implement stand or placing them in the return chute.

6) Judge - a recorder scoring the results sheet and calling each athlete (and the one who is to follow).

7) Judge in charge of the scoreboard (trial-number-result).

8) Judge in charge of the clock indicating to the athletes that they have a certain time to take their trial.

9) Judge in charge of athletes.

10) Judge in charge of the implement stand.

Note (i): This is the traditional setting-up of the officials. In major competitions, where a data system and electronic scoreboards are available, specialised personnel are certainly required. To be clear in these cases, the progress and scoring of a Field Event is followed by both the recorder and by the data system.

Note (ii): Officials and equipment must be placed in such a way as not to obstruct the athlete's way nor impede the view of the spectators.

Note (iii): As a safety precaution it is recommended to delay handing the implement to the athlete until the landing area is clear.

Note (iv): The clock should be positioned such that the athlete can easily see it. It may therefore need to be moved for each athlete.

Rule 37: Club Throw

The Competition

1. The club shall be held at its neck and/or head with one hand only. It may be thrown either from a position facing the landing sector or from a position facing backward and throwing overhead.

The Club

2. Construction. The Club shall consist of four main parts: a head, a neck, a body and an end. The head, neck and body shall be solid and made of wood so as to constitute a fixed and integrated whole. The body shall have fixed it to a cylindrical end constructed of metal without indentations, projections or sharp edges.
3. The surface of the head, neck and body shall be smooth and have no dimples or pimples, grooves or ridges, holes or roughness.

4. The head shall be spherical or cylindrical in shape and immediately taper towards the neck. The diameter of the widest part of the body shall not exceed 60mm and may be cylindrical. The club shall taper regularly towards the neck and slightly towards the metal end.
5. It shall conform to the following specifications:

Club	
Minimum weight for admission to competition and acceptance of a Record	397g
Information for manufacturers Range for supply of implement for competition	 402g 422g
Overall length (including metal end) Min. Max.	 350mm 390mm
Diameter of neck Min. Max.	 18mm 20mm
Diameter of widest part of the body Min. Max.	 50mm 60mm
Diameter of metal end Min. Max.	 38mm 39mm
Thickness of metal end Min. Max.	 12.5mm 13mm

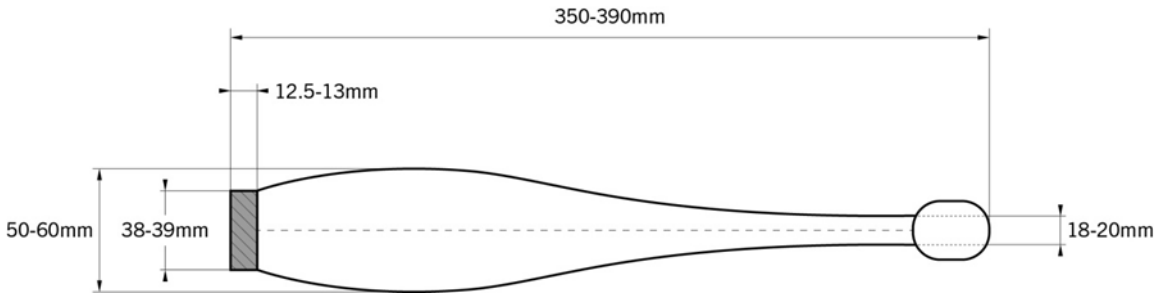

Figure 24 – Club

COMMENT: The Club Throw is one of the more dangerous events for Officials and therefore special care must be taken to ensure the safety of all Officials, other athletes and their assistants as well as media and spectators. Announcing that the implement is being handed to the athlete may improve safety for all concerned. In addition, advising the athlete that it is now safe to throw will increase the safety for all concerned, as indicated in the commentary under Note (i) on Rule 24.17.

SECTION V – INDOOR COMPETITIONS

Rule 38: Applicability of Outdoor Rules to Indoor Competitions

(Rule 210)

With the exceptions stated in the following Rules of this Section V and the requirement for wind measurement set out in Rule 18 and Rule 27, the Rules of Sections I to IV for outdoor competitions shall apply to Indoor Competitions.

Rule 39: The Indoor Stadium

(Rule 211)

1. The stadium shall be completely enclosed and covered. Lighting, heating and ventilation shall be provided to give satisfactory conditions for competition.
2. The field of play should include an oval track; a straight track for sprints and runways and landing areas for jumping events. In addition, a circle and landing sector for the Shot Put should be provided, whether permanently or temporarily. All the facilities should conform to the specifications in the World Athletics Track and Field Facilities Manual.
3. All the tracks, runways or take-off surface areas shall be covered with a synthetic material that should preferably be able to accept 6mm spikes in running shoes. If the track manufacturer or the stadium operator mandates an alternate maximum or prohibits the use of certain shaped spikes, this shall be applied and the athletes notified of accordingly.

   WPA Indoor Championships should be held only on facilities that hold a current valid World Athletics Indoor Athletics Facility Certificate.

   It is recommended that other WPA Recognised competitions (see Part B - 3.1.2) should also be held on these facilities.
4. The foundation on which the synthetic surface of the tracks, runways and take-off areas is laid shall be either solid e.g., concrete or, if of suspended construction (such as wooden boards or plywood sheets mounted on joists), without any special sprung sections and, as far as technically possible, each runway shall have a uniform resilience throughout. This shall

be checked, for the take-off area for the jumps, before each competition.

Note (i): A "sprung section" is any deliberately engineered or constructed section designed to give extra assistance to an athlete.

Note (ii): The World Athletics Track and Field Facilities Manual, which may be downloaded from the World Athletics website, contains more detailed and defined specifications for planning and construction of indoor stadia including diagrams for track measurement and marking.

Note (iii): The current standard forms required to be used for the certification application and measurement report as well as the Certification System Procedures may be downloaded from the World Athletics website.

COMMENT: Lack of suitable lighting is a common problem for Indoor Competitions. A covered stadium must have a lighting which allows a correct and fair delivery of the events and if there is television coverage the illumination level may need to be higher. The finish line area(s) may require additional lighting for the Fully Automatic Timing.

Rule 40: The Straight Track

(Rule 212)

1. The lateral inclination of the track should not exceed 1:100 (1%) unless special circumstances exist which justify World Athletics providing an exemption and the inclination in the running direction shall not exceed 1:250 (0.4%) at any point and 1:1000 (0.1%) overall.

Lanes

2. The track should have a minimum of 6 and a maximum of 8 lanes separated and bounded on both sides by white lines 50mm wide. The lanes shall all be 1.22m ± 0.01m wide including the lane line on the right.

   Note: For all tracks constructed before 1 January 2004, the lanes may have a width of maximum 1.25m. However, when such a track is fully resurfaced, the lane width shall comply with this Rule.

Start and Finish

3. There should be a clearance of at least 3m behind the start line free of any obstruction. There shall be a clearance of at least 10m beyond the finish line free of any obstruction with adequate provision beyond for an athlete to come to a halt without injury.

   Note: It is strongly recommended that the minimum clearance beyond the finish line should be 15m.

COMMENT: The straight track can measure 50m or 60m. In major competitions, it is necessary that the events take place over a distance of 60m.

If advice is sought, it is necessary to insist on the area which must be free at the start and at the finish.

Experience has proved that in many situations, behind the starting line, the free zone cannot be more than 2 metres. This distance is sufficient to place the starting-blocks with false start apparatus and the lane boxes indicating the lanes.

Rule 41: The Oval Track and Lanes

(Rule 213)

1. The nominal length should preferably be 200m. It shall consist of two parallel straights and two bends, which may be banked, whose radii should be equal.

   The inside of the track shall be bordered either with a kerb of suitable material, approximately 50mm in height and width, or with a white line 50mm wide. The outside edge of this kerb or line forms the inside of lane 1. The inside edge of the line or kerb shall be horizontal throughout the length of the track. However, this kerb or line may be located on the banking slope such that the pivot line of the banking shall be horizontal throughout the length of the banking. The kerb on the two straights may be omitted, and a white line 50mm wide substituted.

Note: All measurements shall be taken as indicated in Rule 15.2

Lanes

2. The track should have a minimum of four and a maximum of six lanes.

   The nominal width of the lanes shall be between 0.90m and 1.10m including the lane line on the right. All lanes shall be of the same nominal width with a tolerance of ±0.01m to the selected width. The lanes shall be separated by white lines 50mm wide.

COMMENT: Despite the oftentimes narrowness of the width of the lanes for indoor competitions, athletes must still start (e.g. Have their hands completely within) inside their lanes. This does not mean that part of their starting blocks cannot be outside their lanes providing they do not interfere with another athlete, (see Rule 16.2 (e)).

Banking

3. The angle of banking in all the lanes should be the same at any cross section of the track. The straight may be flat or have a maximum lateral inclination of 1:100 (1%) towards the inside lane.

   In order to ease the change from the straight to the banked bend, the change may be made with a smooth gradual horizontal transition which may be extended into the straight. In addition, there should be a vertical transition.

Marking of the Inside Edge

4. Where the inside edge of the track is bordered with a white line, it shall be marked additionally with cones or flags on the bends and optionally on the straights. The cones shall be at least 0.15m high. The flags shall be approximately 0.25mx0.20m in size, at least 0.45m high and set at an angle of 60° with the ground away from the track. The cones or flags shall be placed on the white line so that the edge of the base of the cone or flag pole coincides with the edge of the white line closest to the track. The cones or flags shall be placed at distances not exceeding 1.5m on the bends and 10m on the straights.

   Note: the use of an inside kerb is strongly recommended.

COMMENT: An Oval Track may be longer than 200m but any records for 200m or longer races would not be ratified. The development of a 200m track is more advantageous than those of a shorter distance. To organise top level competitions, it will be useful to have a 6-lane track. The

ideal width of the lanes of an Oval Track should be 1m.

Cones must be placed not only along the bends, but along the whole of the oval track.

When positioning the flags or cones it must be taken into account that the white line on the inside edge of lane 1 does not belong to the runner drawn in that lane. Cones are preferred and recommended for Indoor Competitions

Rule 42: Start and Finish on the Oval Track

(Rule 214)

1. Technical information on the construction and marking of a 200m banked indoor track are given in detail in the World Athletics Track and Field Facilities Manual. The basic principles to be adopted are given hereunder.

Basic Requirements

2. The start and finish of a race shall be denoted by white lines 50mm wide, at right angles to the lane lines for straight parts of the track and along a radius line for curved parts of the track.
3. The requirements for the finish line are that, if at all possible there should be only one for all the different lengths of race; that it shall be on a straight part of the track and that as much of that straight as possible should be before the finish.
4. The essential requirement for all start lines, straight, staggered or curved, is that the distance for every athlete, when taking the shortest permitted route, shall be the same.
5. As far as possible, start lines (and take-over zone lines for relay races) should not be on the steepest part of the banking.

Conduct of the Races

6.

   a) Races of up to, and including, 300m shall be run entirely in lanes.

b) Races over 300m, and less than 800m shall start and continue in lanes until the break line marked at the end of the second bend.

c) For the start of races of 800m, each athlete may be assigned a separate lane, or up to two athletes may be assigned per lane, or a group start, preferably commencing in lanes 1 and 4, may be used. In these cases, athletes may leave their lane, or those running in the outer group may join the inner group, only after the break line marked at the end of the first bend, or if the race is run with two bends in lanes, end of the second bend.

d) Races longer than 800m shall be run without lanes using an arced start line or group starts. If a group start is used, the break line shall be at the end of either the first or second bend. If an athlete does not follow this Rule, he shall be disqualified. The break line shall be an arced line marked after each bend, 50mm wide, across all lanes other than lane 1. To assist athletes identify the break line, small cones or prisms, 5cm 50mm × 50mm and no more than 0.15m high, preferably of different colour from the break line and the lane lines, shall be placed on the lane lines immediately before the intersection of the lane lines and the break line.

Note (i): In competitions other than IPC Games and IPC Competitions (see Part B - 3.1.2 (a) and (b)) the NPCs concerned may agree not to use lanes for the 800m event.

Note (ii): On tracks with less than six lanes, a group start may be used to allow six athletes to compete. This doesn't apply for athletes in class 11 and class 12 if accompanied by a guide-runner.

Note (iii) For races running in lanes, athletes in Sport Classes 11 and 12, if accompanied by a guide-runner, shall have two lanes available.

Start Line and Finish Line for a Track of 200m Nominal Length

7. The start line in lane 1 should be on the principal straight. Its position shall be determined so that the most advanced staggered start line in the outside lane (400m races) should be in a position where the angle of banking should not be more than 12 degrees.

   The finish line for all races on the oval track shall be an extension of the start line in lane 1, right across the track and at right angles to the lane lines.

COMMENT: Colours to use for marking the track are indicated on the Track Marking Plan

included in the World Athletics Track and Field Facilities Manual.

Rule 43: Seeding, Draws and Qualification in Track Event

(Rule 215)

Rounds and Heats

1. In indoor competitions, the following tables shall, in the absence of extraordinary circumstances, be used to determine the number of rounds and the number of heats in each round to be held and the qualification procedure, i.e., those to advance by place (P) and time (T), for each round of Track Events:

60m

Declared Entries	First Round Heats	Place	Time	Second Round Heats	Place	Time	Semi-Finals Heats	Place	Time
9-16	2	3	2						
17-24	3	2	2						
25-32	4	3	4				2	4	
33-40	5	4	4				3	2	2
41-48	6	3	6				3	2	2
49-56	7	3	3				3	2	2
57-64	8	2	8				3	2	2
65-72	9	2	6				3	2	2
73-80	10	2	4				3	2	2

200m, 400m, 800m, 4x200m, 4x400m

Declared Entries	First Round Heats	Place	Time	Second Round Heats	Place	Time	Semi-Finals Heats	Place	Time
7-12	2	2	2						
13-18	3	3	3				2	3	
19-24	4	2	4				2	3	
25-30	5	2	2				2	3	
31-36	6	2	6				3	2	
37-42	7	2	4				3	2	
43-48	8	2	2				3	2	
49-54	9	2	6	4	3		2	3	
55-60	10	2	4	4	3		2	3	

1500m

Declared Entries	First Round Heats	Place	Time	Second Round Heats	Place	Time	Semi-Finals Heats	Place	Time
12-18	2	3	3						
19-27	3	2	3						
28-36	4	2	1						
37-45	5	3	3				2	3	3
46-54	6	2	6				2	3	3
55-63	7	2	4				2	3	3

The following alternative tables shall be used for the specific class or class combination as denoted in the respective table. For class combination not entirely covered by the below tables, the above regular tables shall normally be applied, otherwise an appropriate table shall be determined by the Technical Delegate.

60m (T11-12) – 8 Lanes

Declared Entries		First Round Heats	Place	Time	Second Round Heats	Place	Time	Semi-Finals Heats	Place	Time
5-8	2	1	2							
9-12	3	1	1							
13-16	4	1	4					2	1	2
17-20	5	1	7					3	1	1
21-24	6	1	6					3	1	1
25-28	7	1	5					3	1	1
29-32	8	1	8		4	1	4	2	1	2

200m, 400m, 800m (T11-12) – 6 Lanes

Declared Entries		First Round Heats	Place	Time	Second Round Heats	Place	Time	Semi-Finals Heats	Place	Time
4-6	2	1	1							
7-9	3	1	0							
10-12	4	1	2					2	1	2
13-15	5	1	1					2	1	2
16-18	6	1	0					2	1	2

1500m (T11-12) – 6 Lanes

Declared Entries	First Round Heats	Place	Time	Second Round Heats	Place	Time	Semi-Finals Heats	Place	Time
6-10	2	1	3						
11-15	3	1	2						
16-20	4	1	6				2	1	3

Note: The above qualifying procedures are only valid for 6 lanes oval tracks and/or 8 lanes straight tracks.

COMMENT: For an outdoor competition with a track having only 6 lanes this rule could be used for seeding and progressions.

Draw for Lanes

2. For all events run wholly or partly in lanes around a bend, where there are successive rounds of a race, three draws for lanes will be made:
   a) One for the two highest ranked athletes or teams to determine placings in the outer two lanes;
   b) Another for the third and fourth ranked athletes or teams to determine placings in the next two lanes;
   c) Another for the other athletes or teams to determine placings in any remaining inner lanes;
   d) The ranking referred to shall be determined as follows:
   e) For the first round, from the relevant list of valid performances achieved during the predetermined period;
   f) After the first round, in accordance with the procedures identified in Rule 21.3 (a) or in the case of 800m, Rule 21.3 (b).
3. For all other races, the lane order shall be drawn in accordance with Rules 21.4 and 21.5.

COMMENT: Where tracks have a different configuration of lanes, then the tables to be used should be adapted either in the specific Technical Regulations for the competition or if not by the Technical delegate(s) or the LOC

Rule 44: Spike Length

(Rule 216)

When a competition is conducted on a synthetic surface, that part of each spike which projects from the sole or the heel shall not exceed 6mm (or as required by the LOC) subject always to the maxima provided in Rule 6.4.

Rule 45: Relay Races

(Rule 218)

Conduct of the Races

1. In the 4x200m relay race all the first leg and the first bend of the second leg up to the nearer edge of the break line described in Rule 42.6 shall be run in lanes. Each takeover zone shall be 20m long and the second, third and fourth athletes shall start within this zone.
2. The 4x400m relay race shall be run according to Rule 42.6 (b).
3. The 4x800m relay race shall be run according to Rule 42.6 (c).
4. In relay races where athletes are permitted to leave their respective lanes on entering the straight after running two or three bends in lanes, the layout for the echelon start is described in Rule 42.
5. The waiting athletes in the third and fourth legs of the 4x200m relay race, in the second, third and fourth legs of the 4x400m and the 4x800m relay race shall, under the direction of a designated official, place themselves in their waiting position in the same order (inside to out) as the order of their respective team members as they enter the last bend. Once the incoming athletes have passed this point, the waiting athletes shall maintain their order, and shall not exchange positions at the beginning of the take-over zone. If an athlete does not follow this Rule, his team shall be disqualified.

Note: Owing to the narrow lanes, indoor relay races are much more liable to collisions and unintended obstruction than outdoor relay races. It is, therefore, recommended that, when possible, a spare lane should be left between each team.

Rule 46: High Jump

(Rule 219)

Runway and Take-Off Area

1. If portable mats are used, all references in the Rules to the level of the take-off area must be constructed as referring to the level of the top surface of the mat.
2. An athlete may start his approach on the banking of the oval track provided that the last 15m of his run up is on a runway complying with Rules 26.3, Rule 26.4 and Rule 26.5.

Rule 47: Horizontal Jumps

(Rule 221)

Runway

An athlete may start his approach on the banking of the oval track provided that the last 40m of his run up is on a runway complying with Rules 27.1and Rule 27.2.

Rule 48: Shot Put

(Rule 222)

Landing Sector

1. The landing sector shall consist of some suitable material on which the shot will make an imprint, but which will minimise any bounce.
2. The landing sector shall be enclosed at the far end and on the two sides, as close to the circle as may be necessary for safety of the other athletes and officials, by a stop barrier and protective netting of approximately 4m height which should stop a shot whether in flight or bouncing from the landing surface.
3. In view of the limited space inside an indoor field of play, the area enclosed by the stop barrier may not be large enough to include a full 34.92° sector. The following conditions shall apply to any such restriction:
   a) The stop barrier at the far end shall be at least 0.50m beyond the current World Record in Shot Put for men or women;
   b) The sector lines on either side shall be symmetrical about the centre line of the 34.92° sector;
   c) The sector lines may either run radially from the centre of the Shot Put circle including a full 34.92° sector, or may be parallel to each other and the centre line of the 34.92° sector. Where the sector lines are parallel, the minimum separation of the two sector lines shall be 9m.

COMMENT: It is recommended that the stop barrier / protective netting on either side should be extended towards the circle so that it starts within 8m of it and that for the length of these extensions, the height of the netting should be at least 5m.

4. For Seated Throw Shot Put Events, a stop board is not necessary. For these classes, the use of a movable platform at a suitable place in the indoor area is allowed.

Construction of the Shot

5. Depending on the type of landing area (see Rule 48.1), the shot shall be either solid metal or metal cased or, alternatively, soft plastic or rubber casing with a suitable filling. Both types of shot may not be used in the same competition.

Solid Metal or Metal Cased Shot

6. These shall comply with Rule 31.4 and Rule 31.5, for the Shot Put outdoors.

Plastic or Rubber Cased Shot

7. The shot shall have a soft plastic or rubber case with a suitable filling such that no damage shall be caused when landing on a normal sports hall floor. It shall be spherical in shape and its surface finish shall be smooth.

   Information for manufacturers: to be smooth, the surface average height must be less than 1.6µm, i.e., a roughness number N7 or less.

8. The shot shall conform to the following specifications:

Shot						
Minimum weight for admission to competition and acceptance of a						
Record	2.000kg	3.000kg	4.000kg	5.000kg	6.000kg	7.260kg
Information for manufacturers						
Range for supply of implement for competition	2.005kg 2.025kg	3.005kg 3.025kg	4.005kg 4.025kg	5.005kg 5.025kg	6.005kg 6.025kg	7.265kg 7.285kg
Minimum Diameter	80mm	85mm	95mm	100mm	105mm	110mm
Maximum Diameter	110mm	120mm	130mm	135mm	140mm	145mm

SECTION VI - ROAD RACES

Rule 49: Road Races

(Rule 240)

Preamble

In the case of mass participation events held outside the stadium, these rules should normally only be applied in full to those athletes, if any, who are designated as taking part in the elite or other defined section of the races such as age group categories for which there are placings for awards or prizes. Race organisers should outline in the information provided to other athletes which other rules will apply to their participation, particularly those pertaining to their safety.

Distances

1. The standard distances for men and women shall be 10km, Half-Marathon, Marathon (42.195km).

Course

2. The races shall be conducted on made-up roads. However, when traffic or similar circumstances make it unsuitable, the course, duly marked, may be on a bicycle path or footpath alongside the road, but not on soft ground such as grass verges or the like. The start and finish may be within an athletic field of play.

   Note (i): It is recommended that, for road races staged over standard distances, the start and finish points, measured along a theoretical straight line between them should not be further apart than 50% of the race distance.

   Note (ii): It is acceptable for the start, finish and other segments of the race, except for the wheelchair events, to be conducted on grass or other non-paved surfaces. These segments shall be kept to a minimum.

3. The course shall be measured along the shortest possible route that an athlete could follow within the section of the road permitted for use in the race.

In all IPC Games and IPC Competitions (see Part B - 3.1.2 (a) and (b)) the measurement line should be marked along the course in a distinctive colour that cannot be mistaken for other markings.

The length of the course shall not be less than the official distance for the event. At IPC Games and IPC Competitions (see Part B - 3.1.2 (a) and (b)), the uncertainty in the measurement shall not exceed 0.1% (i.e., 42m for the Marathon) and the length of the course should have been certified in advance by a World Athletics approved course measurer.

Note (i): For measurement, the "Calibrated Bicycle Method" shall be used.

Note (ii): To prevent a course from being found to be shorter than the official race distance on future re-measurement, it is recommended that a "short course prevention factor" be built in when laying out the course. For bicycle measurements this factor should be 0.1% which means that each km on the course will have a "measured length" of 1001m.

Note (iii): If it is intended that parts of the course on race day will be defined by the use of non-permanent equipment such as cones, barricades, etc. their positioning shall be decided not later than the time of the measurement and the documentation of such decisions shall be included in the measurement report.

Note (iv): It is recommended that for Road Races staged over standard distances, the overall decrease in elevation between the start and finish should not exceed 1:1000, i.e., 1m per km (0.1%).

Note (v): A course measurement certificate is valid for five years, after which the course shall be re-measured even when there are no obvious changes to it.

4. The distance in kilometres on the route shall be displayed to all athletes.

Start

5. The races shall be started by the firing of a gun, cannon, air horn or like device. The commands and procedure for races longer than 400m shall be used. In races which include a large number of athletes, five-minute, three-minute and one-minute warnings before the start of the race should be given. On the command "On your marks", the athletes shall assemble on the start line in the manner determined by the LOC. The Starter shall ensure

that no athlete has his foot (or any part of his body) or the front wheel (classes T33-34 and T51-54) touching the start line or the ground in front of it, and shall then start the race.

COMMENT: As for middle and long distance Track Events, it is emphasised for events held outside the stadium that Starters and Referees should avoid being over-zealous in the application of the false start Rules to such events. Recalling starts in road races and other outside events can be difficult, and in large fields impractical, in any case. However, where there is a clear and wilful breach, the Referee should not hesitate to consider appropriate action in respect of an individual either during or after the race. However, in major events, where the start mechanism malfunctions, and it is clear or possible that the timing system may not have started a recall where practical might be the best option.

Note (i): In Road races, ambulant athletes may start together, but will be ranked by the finishing time according to the eligible sport class(es) of each event.

Note (ii): In Road races, wheelchair athletes will start according to the decision of the Technical Delegate for the event but will be ranked by the finishing time according to the eligible sport class(es) of each event.

Note (iii): Seeding for Wheelchair Road Races should be by Sports Class, Seed Time and Gender (i.e., T54/34 Males should be seeded in the front row/s, then T54/34 Females, then T52/33/51 Males and then the T52/33/51 Females). The start of each Sports Class event/division should be separated by intervals of a minimum 30 seconds.

Note (iv): The seeding grid for each Sports Class event/division should position the #1 seeded athlete at the centre position in the front row of the grid with #2 and #3 placed on their right and left, #4 and #5 on their right and left and so on (See Figure 25).

Note (v): In the case of events starting outside the stadium, the start line may be up to 0.3m in width and made of any colour contrasting distinctively with the surface of the start area.

COMMENT: For IPC Games and IPC Competitions and WPA Sanctioned Competitions (3.12 (a) - (c)), at least, the basis of seeding should be by the best valid time achieved by each athlete during the pre-determined period. This period will be specified in the Technical Regulations or in the document setting out the entry conditions and standards for the competition. Where there is no such specification, then the Technical Delegate(s) together with the LOC should decide the basis on which the seeding will be determined. For World Para Athletics Approved Competitions (3.1.2 (d)) the seeding and seeding grid shall be

agreed between the Technical Delegate (if appointed) and the LOC.

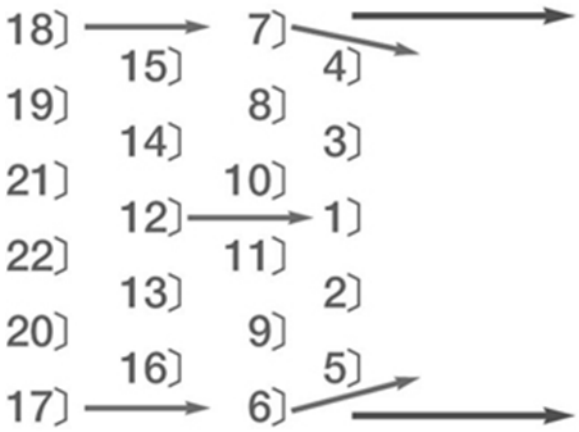

Figure 25 – Example of Seeding Grid for Wheelchair Road Races

COMMENT: Establishing the starting positions is not as important tactically for a half-marathon or marathon, or any mass road race in reality, however it is important to the athletes that proper recognition be given. The above is an example only, but the importance of the first two rows is paramount.

The Finish

6. In the case of events finishing outside the stadium:
   a) the finish line may be up to 0.30m in width and may be of any colour contrasting distinctively with the surface of the finish area.
   b) In races for athletes in Sports Classes T11 and T12 competing with a guide-runner the athlete must cross the finish line in front of the guide-runner or the athlete will be disqualified.

Safety

7. The LOC of Road Races shall ensure the safety of athletes and officials. At IPC Games and IPC Competitions (see Part B - 3.1.2 (a) and (b)), the LOC shall ensure that the roads used for the competition are closed to motorised traffic in all directions;

Drinking / Sponging and Refreshment Stations

8. Except for wheelchair events:

   a) Water and other suitable refreshments shall be available at the start and finish of all races;

   b) For all events, water shall be available at suitable intervals of approximately 5km. For events longer than 10km, refreshments other than water may be made available at these points;

      Note (i): Where conditions warrant, taking into account the nature of the event, the weather conditions and the state of fitness of the majority of the competitors, water and/or refreshments may be placed at more regular intervals along the route.

      Note (ii): Mist stations may also be arranged, when considered appropriate under certain organisational and/or climatic conditions.

      COMMENT: If mist stations are in place, they shall not span over the entire width of the course. This is to allow for some athletes to run or wheel without getting wet. It is very important to note that many wheelchair racers typically do not like mist stations because push rims and gloves might get wet and therefore hamper propulsion.

   c) Refreshments may include drinks, energy supplements, foodstuffs or any other item other than water. The LOC will determine which refreshments it will provide based on prevailing conditions;

   d) Refreshments will normally be provided by the LOC, but it may permit athletes (and their guide-runners) to provide their own refreshments, in which case the athlete shall nominate at which stations they shall be made available to the athlete. Refreshments provided by the athletes (and their guide-runners) shall be kept under the supervision of officials designated by the LOC from the time that the refreshments are lodged by the athletes or their representatives. Those officials shall ensure that the refreshments are not altered or tampered with in any way;

e) The LOC shall delineate, by barriers, tables or markings on the ground, the area from which refreshments can be received or collected. It should not be directly in the line of the measured route. Refreshments shall be placed so that they are easily accessible to, or may be put by authorised persons into the hands of, the athletes (and/or his guide-runner). Such persons shall remain inside the designated area and not enter the course nor obstruct any athlete. No officials shall, under any circumstances, move beside an athlete while he is taking refreshment or water;

f) In IPC Games and IPC Competitions (see Part B - 3.1.2 (a) and (b)), a maximum of two officials per Country may be stationed behind the area designated for their country at any one time;

Note: For an event in which a Country may be represented by more than three athletes, the Technical Regulations may allow additional officials at the refreshment tables.

COMMENT: The revisions to Rule 49 adopted in 2011 included a harmonisation of the provisions within the rules pertaining to outside events, where this was logical and in accordance with practice. As a result, specific provision was made for the first time in this rule to cover team officials and refreshment tables.

g) An athlete and/or the athlete's guide-runner may at any time carry water or refreshment by hand or attached to his body provided it was carried from the start or collected or received at an official station;

h) An athlete and/or guide-runner who receives or collects refreshment or water from a place other than the officials stations, except where provided for medical reasons from or under the direction of race officials, or takes the refreshment of another athlete and/or guide-runner, should, for a first such offence, be warned by the Referee normally by showing a yellow card. For a second offence, the Referee shall disqualify the athlete, normally by showing a red card. The athlete shall then immediately leave the course.

i) Guide-runners may collect refreshments for their guided athlete from the official stations provided they are passed to the athlete within the designated area from which refreshments can be received or collected. Guide-runners may not pass any refreshments to any athlete or guide-runner outside the designated area.

Note: An athlete and/or guide-runner may receive from or pass to another athlete and/or guide-runner refreshment, water or sponges provided it was carried from the start or

collected or received at an official station. However, any continuous support from an athlete and/or guide-runner to one or more others in such a way may be regarded as unfair assistance and warnings and/or disqualifications as outlined above may be applied.

COMMENT: It is important to note here that the collection of refreshments must be made in the designated area, and they must not be passed to the athlete by the guide-runner outside of this designated area.

Wheelchair athletes (Sport Classes T33-34, T51-54) may carry their own refreshments.

Note: The LOC must ensure that officials are aware of the specific problems of safety presented in providing drinks to athletes with vision impairment (Classes T11-13) or upper limb impairment (Classes T45-46), and that adequate training is given to all assistants involved.

Race Conduct

9. In Road Races, an athlete may leave the marked course with the permission and under the supervision of an official, provided that by going off course he does not lessen the distance to be covered.

10. If the Referee is satisfied on the report of a Judge or Umpire or otherwise that an athlete has left the marked course thereby shortening the distance to be covered, he shall be disqualified.

COMMENT: The finish area shall be wide enough to enable several runners to sprint side by side and long enough to separate them at the finish. Unless a Transponder Timing System is being used together with a backup system (such as a video recording) to check finishing orders, finish lanes ("funnels") should be set up some 8 to 10 metres after the finish line with a maximum width of 0.70-0.80m. Once in the funnels, the athletes must not be able to overtake one another. The funnels should be 35-40m long into which the athletes will be directed as they cross the finish line. At the end of each funnel, officials will note the athletes' numbers/names and if applicable recover their transponder timing chips.

The funnels should have moveable ropes at the end at which the athletes enter, so that when one lane is full, the next rope can be drawn across behind the last athlete, to enable the next finisher to enter the new finish lane, and so on.

Judges and Timekeepers will additionally be placed on either side of the finish line and it is recommended that, in order to follow up any appeal relative to the finishing order, an official with video recording equipment (if possible with a timing clock in sight) shall be assigned and placed a few metres after the finish line in order to record the order in which the athletes cross the line.

Where a Road Race finishes on a running track the provisions of Rule 18.5 (Lane Infringement) do not apply and, in the event that an athlete steps inside the track at the end of a Road Race the Referee shall apply this Rule 49.10 in determining whether an athlete has left the marked course thereby shortening the distance to be covered having regard to all the circumstances.

11. Umpires should be placed at regular intervals and at each key point. Other umpires should move along the course during the race.

COMMENT: It is acknowledged that following the practice of first giving a warning when applying relevant aspects of Rule 49 and where applicable Rule 7.2 and Rule 7.3 will create difficulties in implementation but where the opportunity arises, the Referee should do so. It is suggested that one option might be that course or refreshment station umpires be designated as assistant Referees and that they be in communication with the Referee and each other to ensure the effective co-ordination of warnings and disqualifications. But there remains the possibility as per the Note to Rule 7.2 that in some circumstances disqualification can, and should, occur without a warning being given.

When a Transponder Timing System is not in use, or where an additional back-up recording system is desired, it is recommended that a funnel system such as that described in the commentary on Rule 49.10 be used.

12. The LOC shall provide numbered bibs that distinguish between athletes of each Sport Class.

13. During road races athletes in Sport Classes T11-12 are allowed to use a maximum of two (2) guide-runners. Any interchanges must take place without any hindrance to other athletes, and may take place at either the 10km, 20km, 21.1km (half-way) or 30km marks for marathon races, 10km mark for half-marathon races and 5km mark for 10km races.

    Note (i): It is strongly recommended that the LOC ensures that the race takes place in its entirety in good daylight conditions.

    Note (ii): Should there be an interchange of guide-runners, the athlete and the substituting

guide-runner must both finish the event in order for the performance to be recognised.

Note (iii): Depending on the set up of the course, the interchange may take place at an alternative mark as determined by the Technical Delegate(s) together with the LOC. The interchange mark must be notified to athletes in an appropriate time frame before the race.

14. The intention to interchange guide-runners must be notified in advance to the Referee and Technical Delegate. The technical officials will determine the conditions of the interchange and will communicate these in advance to the athletes.

    Note: If the interchange does not take place after the technical arrangement being made, the athlete shall be disqualified from the race.

Drafting

(Sport Classes T33-34, T51-54)

15. In WPA Recognised Competitions under Part B - 3.1.2, for Road Race Events where Sport Classes T33-34, T51-54 compete together, drafting behind an athlete from another Sports Class or gender is prohibited. Athletes are also prohibited from drafting behind motorised vehicles or bicycles. In violation of this Rule, the athlete concerned shall be disqualified.

    Note (i): Drafting is defined as seeking a performance advantage by following another athlete within a distance of less than 5m for one minute.

    Note (ii): In Road races, Sport Class T53 and T54 are considered as one class. The Rule 49.15 does not apply.

Obstruction

16. The provisions of Rules 18.2, 18.3 and 18.4 shall apply to Road Races.

SECTION VII - PROTESTS AND APPEALS

Rule 50: Protests and Appeals

(Rule 146)

These Protest Regulations do not cover Classification or Anti-Doping issues which will be dealt with exclusively under the World Anti-Doping Code and the WPA Classification Rules and Regulations respectively.

Protests

1. Protests concerning the status of an athlete to participate in a competition (other than relating to Classification and Anti-Doping) must be made to the Technical Delegate(s) prior to the commencement of the competition. Once the Technical Delegate(s) make(s) a decision, there shall be a right of appeal to the Jury of Appeal. If the matter cannot be resolved prior to the competition, the athlete shall be allowed to compete "under protest" and the matter shall be referred to the IPC. In such cases WPA will be entitled to rule conclusively on an athlete's status after the event has been completed and the results may then be adjusted retrospectively.

2. Protests concerning the result or conduct of an event shall be made within 30 minutes of the official announcement of the result of that event.

   The LOC of the competition shall be responsible for ensuring that the time of the announcement of all results is recorded.

COMMENT: Normally this means that the 30 minutes start when the results are posted (with the time noted on the posted results sheet) at the TIC or as indicated in the Technical Regulations for the competition. The Secretary to the Jury of Appeal is the person who "manages" the process. If there isn't one, then someone in the TIC would manage it. That is, ensuring the time limits are being followed, arranging for discussions with the appropriate Referee, etc.

3. Any protest shall, in the first instance, be made orally to the Referee by an athlete or by someone acting on his behalf or by an official representative of a team. Such person or team may only protest if they are competing in the same round of the event to which the protest (or subsequent appeal) relates (or are competing in a competition in which a team points

score is being conducted). To arrive at a fair decision, the Referee should consider any available relevant evidence. The Referee may decide on the protest or may refer the matter to the Jury of Appeal. If the Referee makes a decision, there shall be a right of appeal to the Jury. Where the Referee is not available, the protest should be made to him through the Technical Information Centre (TIC) or other administrative base where official competition administration is being carried out.

4. In a Track Event

   a) if an athlete makes an immediate oral protest against having been charged with a false start, the Start Referee (or if one is not appointed, the relevant Track Referee) may, if he is in any doubt, allow the athlete to compete "under protest" in order to preserve the rights of all concerned. Competing "under protest" shall not be allowed if the false start was detected by a World Athletics approved Start Information System; unless for any reason the Referee determines that the information provided by the system is obviously inaccurate.

   b) a protest may be based on the failure of the Starter to recall a false start or, under Rule 17.5 to abort a start. The protest may be made only by, or on behalf of, an athlete who has completed the race. If such a protest is upheld, any athlete who committed the false start or whose conduct should have led to the start being aborted, and who was subject to warning or disqualification according to Rule 17.5 or Rule 17.7 and Rule 17.8, shall be warned or disqualified. Whether or not there may be any warning or disqualification, the Referee shall have the authority to declare the event or part of the event void and that it or part of it shall be held again if in his opinion justice demands it.

      Note: The right of protest and appeal in Rule 50.4 (b) shall apply whether or not a Start Information System is used.

   c) If a protest or appeal is based on an athlete's incorrect exclusion from an event due to a false start and it is upheld after the completion of the race, then the athlete should be afforded the opportunity to run on his own to record a time in the event and consequently, if applicable, to be advanced to subsequent rounds. No athlete should be advanced to a subsequent round without competing in all rounds unless the Referee or Jury of Appeal determines otherwise in the particular circumstances of the case, e.g. the shortness of time before the next round or the length of the race.

Note: This Rule may also be applied by the Referee, the Jury of Appeal in other circumstances where it is deemed appropriate (see Rule 18.2).

d) When a protest is made by or on behalf of an athlete or team which did not finish a race, the Referee must first ascertain whether the athlete or team was or should have been disqualified for a breach of the Rules unrelated to the matter raised in the protest. Should that be the case the protest shall be dismissed.

COMMENT: When the Start Referee decides on an immediate oral protest made by an athlete for being charged with a false start, he has to consider all the available data and in case of only a reasonable possibility that the athlete's protest may be valid, he should allow the athlete to compete under protest. After the race, a final decision must be taken by the Referee, a decision that may be subject of an appeal to the Jury. But to be clear, the Referee should not allow an athlete to compete under protest if the false start has been detected by a Start Information System that appears to be working properly or in cases where it is very clear by visual observation that the athlete has committed a false start and there is no valid reason to allow the protest.

These Rules not only apply where a Starter failed to recall a false start but where also a Starter failed to correctly "abort" a start. In both cases the Referee must consider all factors involved in the particular case and must decide if the race (or part of it) has to be re-held. Giving two examples of extreme situations, it will not be logical or necessary to re-run a Marathon race in a case where an athlete who finishes was responsible for a non-recalled false start. But the same will probably not be the case in a sprint event where an athlete was responsible for a non-recalled false start as this may have affected the start and subsequent race of other athletes.

On the other hand, if for example in a preliminary round it was clear that only one or some athletes were disadvantaged by a failure to recall a false start or to abort a start, a Referee could decide that only those athletes be given the opportunity to run again – and if so under what conditions.

Rule 50.4 (c) covers the situation in which an athlete is wrongly given a false start and excluded from a race.

5. In a Field Event, if an athlete makes an immediate oral protest against having a trial judged as a failure, the Referee of the event may, at his discretion, order that the trial be measured and the result recorded, in order to preserve the rights of all concerned. If the protested trial occurred:

   a) During the first three rounds of trials of a horizontal Field Event in which more than eight athletes are competing, and the athlete would advance to any subsequent rounds of trials only if the protest or subsequent appeal was upheld, or;

   b) In a vertical Field Event, where the athlete would advance to a higher height only if the protest or subsequent appeal is upheld, the Referee may, if he is in any doubt, allow the athlete to continue competing under protest to preserve the rights of all concerned.

COMMENT: In cases where the Referee is sure that the decision of the Judges is correct, particularly by his own observation or advice received from a Video Referee, the athlete should not be allowed to continue.

But when considering whether to order the measurement of a trial which is the subject of an immediate oral protest the Referee should:

(a) not do so in cases where there was a clear breach of the Rules, for example in the long jump a clear mark made in the plasticine by the athlete in question or in a throwing event where the implement has clearly landed outside the sector;

(b) always do so (and immediately so as to not delay the competition) in cases where there is any doubt.

The good operation of this Rule means that the Judge with the spike or prism should always mark the point of landing (except in throwing events where the implement clearly lands outside the sector) even when they see a red flag. Apart from the possibility that the athlete may make an immediate oral protest, it is also possible that the Judge with the flags may have incorrectly or accidentally raised the wrong one.

6. The protested performance of the athlete and any other performance achieved while competing under protest will become valid only if the athlete is subsequently found to have competed within the rules such that the trial is no longer judged a failure.

   In Field Events, where, as a result of an athlete competing “under protest”, another athlete is allowed to continue in the competition when he would otherwise not have done so, such

athlete's performances and eventual results will remain valid irrespective of whether the "under protest" athlete's immediate oral protest is successful.

Protest Appeals

7. An appeal against a Protest decision is possible and such appeal must be made to the Jury of Appeal within 30 minutes:

   a) Of the official announcement of the amended result of an event arising from the decision made by the Referee, or;

   b) Of the advice being given by or on behalf of the Referee to those making the protest, where there is no amendment of any result.

   The Appeal shall be in writing, signed by a responsible NPC official on behalf of the athlete or team, and shall be accompanied by an appeal fee of €200 or its equivalent in the currency of the country where the competition is being held. The appeal fee will be forfeited if the appeal is not allowed. Such athlete or team may appeal only if they are competing in the same round of the event to which the appeal relates (or are competing in a competition on which a team points score is being conducted).

   Note: The relevant Referee shall, after his decision on a protest, immediately inform the TIC of the time of the decision. If the Referee was unable to communicate his decision orally to the relevant team(s)/athlete(s), the official time of the announcement will be that of posting of the amended results or of the decision at the TIC.

8. The Jury of Appeal shall consult all relevant persons, including the relevant Referee (except when his decision is to be fully maintained by the Jury of Appeal). If the Jury of Appeal is in doubt, other available evidence may be considered. If such evidence, including any available video evidence, is not conclusive, the decision of the Referee shall be upheld.

9. The Jury of Appeal may reconsider a decision if new conclusive evidence is presented, provided the new decision is still applicable. Normally such reconsideration may be undertaken only prior to the Victory Ceremony for the applicable event, unless the relevant governing body determines that circumstances justify otherwise.

COMMENT: In certain circumstances the Judges (Rule 2.14.2), the Referee (Rule 2.13.6) and the Jury (Rule 50.9) can each reconsider a decision made by them – if it is still applicable and practical to do so.

10. Decisions involving points that are not covered by these Rules shall be reported subsequently by the Chairman of the Jury of Appeal to WPA appointed representative.

11. Decisions of the Referee (subject to appeal under these Regulations) and of the Jury of Appeal shall be final and there shall be no further right of appeal to any other body, including to CAS.

COMMENT: Where an appeal is presented, the payment of the funds (€200 or equivalent local currency) will be retained until after the Victory Ceremony. This will ensure that where the Jury of Appeal reconsiders its decision that the rights of all parties in the dispute are respected and where the decision to change an original decision, there is no question of having to request the appeal funds to be returned to the Jury of Appeal after they may have been returned via an earlier decision of the Jury of Appeal.

Dispute Procedures at WPA Recognised Competitions

As part of the WPA Competition Approval Process the LOC in consultation with the WPA appointed representative may stipulate specific dispute resolution procedures for disputes falling outside the Protest and Protest appeal procedures at WPA Recognised Competitions (see Part B - 3.1.2).

For information regarding the dispute procedures for a specific competition please liaise with the respective Competition Manager and/or the WPA Technical Delegate.

SECTION VIII - WORLD AND REGIONAL RECORDS

Rule 51: World and Regional Records

(Rule 260 and Rule 261)

For detailed information regarding the procedures for Claiming WPA World and Regional Records refer to the WPA:

https://www.paralympic.org/athletics/records

COMMENT: Included on the website are the current application forms for records.

Submission and Ratification

1. WPA World and Regional Records can only be achieved at WPA Recognised Competitions by an eligible athlete (or eligible athletes in the case of a relay event) as defined in Part B - 4 holding a:
   a) Sports Class Status of Confirmed (C), or;
   b) Sports Class Status of Review (R) with a Fixed Review Date which is after the date when the record was achieved.
2. Except for Field Events conducted as provided in Rule 4.7 and Rule 4.8 and Competitions held outside the stadium under Rule 49 no performance set by an athlete will be ratified if it has been accomplished during a mixed competition.

   Note: Women only Road Race records are subject to the conditions set out in Rule 51.22.
3. The following categories of Records are accepted by WPA: World Outdoor Records and Regional Outdoor Records.
4. An athlete (or athletes in case of a relay event) who sets a Record must have been eligible to compete under these Rules, must have been entered into the relevant Competition by a member of the IPC; and all provisions of these Rules must have been duly observed at the relevant Competition.
5. The WPA Technical Delegate, if appointed to the relevant WPA Recognised Competitions

(see Part B - 3.1.2), shall be responsible for ensuring all of the procedural requirements outline in this Rule are fulfilled.

6. When a performance equals or betters an existing Record, the national governing body where the performance was set shall collect, without delay, all the information required for the ratification of the Record by WPA. No performance shall be regarded as a Record until it has been ratified by WPA. The national governing body should immediately inform WPA of its intention to submit a performance.

   Note: The national governing body herein these Rules refers to the authorized body responsible for sending the Athletes to the respective event. This could be a National Paralympic Committee or the NF or the body responsible for Para Athletics in the country.

7. The submitted performance shall be better than or equal to the existing Record for that Event as accepted by WPA. If a Record is equalled, it shall have the same status as the existing Record.

8. The WPA Record Application Form shall be completed and dispatched to the WPA Office within thirty (30) days of a record being achieved. The WPA Record Application Forms are available, on request, from the WPA Office, or may be downloaded from the WPA website at. https://www.paralympic.org/athletics/about/official-documents

   Note: The WPA Record Application Form is required for performances achieved at WPA Approved Competition (see Part B - 3.1.2 (d)).

9. The national governing body where the performance was set shall send, with the WPA Record Application Form:

   a) The printed programme of the Competition (or electronic equivalent);

   b) The official result of the Event, including all information required under this regulation;

   c) In the case of a Track Record where Fully Automated Timing was in operation, the photo finish image of the event and zero control test image for track events up to and including 800m and 4x400m relays; and

   d) Any other information required to be submitted by this regulation, where such information is or should be in its possession.

10. WPA World and Regional Records will only be ratified if they are achieved at:

a) IPC Games, IPC Competitions or WPA Sanctioned Competitions (see Part B - 3.1.2 (a) to (c)) conducted in accordance with the IPC Anti-Doping Code, or;

b) WPA Approved Competitions conducted in accordance with the anti-doping rules of the relevant governing body and the WADC the International Standards at which random in-competition testing (urine only or urine and blood) was also conducted.

Note (i): For the purpose of record ratification, all World and Regional Outdoor Records achieved by athletes in Sport Classes T61-62 shall undergo a measurement of their MASH which shall be conducted at the Call Room.

Note (ii): WPA World and Regional Records will be ratified even though the athlete who sets the record performance may not have been tested at the Competition.

11. Records made in qualification rounds, in deciding ties, in any Event which is subsequently decreed void, may be required to be submitted for ratification.

12. WPA Management Team is authorised to recognise Records.

13. When a Record has been ratified, WPA will supply the official Record certificate, for presentation to Record holders and the performance will be updated and available on the official WPA website.

14. WPA shall update the official List of Records every time a new Record has been ratified. This list shall represent the performances regarded by WPA as being, from the date of the list, the best performances yet set by an athlete or team of athletes in each of the recognised Events.

15. If the performance is not ratified, WPA will provide the reasons as to why this is the case.

Specific Conditions

16. **Except in Road Events:**

a) The performance shall be made in a certified athletics facility, which conforms to Rule 3;

b) For any performance at any distance of 200m or more to be recognised, the track on which it was made shall not exceed 402.3m (440 yards) and the race shall have started on some part of the perimeter;

c) A performance in an oval Track Event shall be made in a lane where, the running line

radius does not exceed 50m, except where the bend is formed with two different radii, in which case the longer of the two arcs should not account for more than 60° of the 180° turn.

d) A performance made in a Track Event outdoors may be made only on a track which conforms to Rule 15.

17. **For Records in Track (Running and Wheelchair Racing) Events**

a) The performance shall be timed by official Timekeepers, by an approved Fully Automatic Photo Finish System (for which a zero control test has been undertaken with Rule 20.20) or a Transponder System used (see Rule 20.25);

b) For races up to and including 800m (including 4x400m), only performances timed by an approved Fully Automatic Timing Photo Finish System shall be ratified

c) For all performance made outdoors up to and including 200m, information concerning wind velocity, measured as indicated in these Rules, shall be submitted. If the wind velocity, measured in the direction of running, averages more than 2 metres per second during the race, the performance will not be ratified.

d) No performance will be ratified where the athlete has infringed Rule 18.5 unless, in cases covered in Rules 18.6(c) and 18.6(d), it is the first infringement in the event.

COMMENT: The amendment to Rule 18.6 means for World Record ratification that if an athlete or relay team achieves a record time and, in that race, that athlete (or any athlete in the relay team) made a single infringement under Rules 18.6(c) or 18.6(d), and in the case of an event with more than one round, it was the first infringement in the event, the record may stand. If the athlete or relay team achieves a record time and, in that race, an infringement occurred more than once or the athlete or relay team carried over such infringement from a previous round of the same event, the record cannot be ratified.

e) For all Records up to and including 400m (including 4x400m), where available starting blocks linked to a World Athletics approved Start Information System shall have been used and must have functioned correctly so that reaction times were obtained and are shown on the results of the Event.

18. **For Records in Relay Events**

The time set by the first athlete in a relay team may not be submitted for ratification as

Record.

19. **For Records in Field Events**

a) The performances shall be measured either by three Field Judges using a calibrated and certified steel tape or bar or by an approved scientific measuring apparatus, the accuracy of which has been confirmed by a qualified Measurement Judge in accordance with Rule 10;

b) In the Long Jump and Triple Jump, information concerning wind velocity, measured as indicated in these rules shall be submitted. If the wind velocity, measured in the direction of jumping, averages more than 2 metres per second, the performance will not be ratified;

c) Records may be credited for more than one performance in a competition, provided that each Record so ratified shall have been equal or superior to the best previous performance at that moment;

d) In Throwing Events, the implement used shall have been checked prior to the Competition in accordance with Rule 2.11. If the Referee becomes aware during an Event that a Record has been equalled or bettered, he shall immediately mark the implement used and undertake a check to ascertain whether it still complies with the Rules or if there has been any change in characteristics. Normally, such implement shall be checked again after the Event in accordance with Rule 2.11.

20. **For Records in Road (Running and Wheelchair Racing) Events**

a) The course must be measured by an "A" or "B" grade World Athletics /AIMS approved measurer who shall ensure that the relevant measurement report and any other information required by this Rule is available to WPA upon request;

b) The start and finish points of a course, measured along a theoretical straight line between them, shall not be further apart than 50% of the race distance;

c) The overall decrease in elevation between the start and finish shall not exceed 1:1000 i.e., 1m per km (0.1%);

d) Any course measurer who originally measured the course or other suitably qualified official designated by the measurer (after consulting the relevant body) with a copy of the documentation detailing the officially measured course shall in advance of the race

check that the course is laid out in conformity with the course measured and documented by the Official course measurer. He shall then ride in the lead vehicle during the competition or otherwise validate that the same course is run by the athletes;

e) The course must be verified (i.e., re-measured) as late as possible before the race, on the day of the race or as soon as practical after the race, by a different "A" grade measurer from the one that did the original measurement;

Note: If the course was originally measured by at least two "A" grade or one "A" and one "B" grade measurers, no verification (re-measurement) under this Rule will be required.

f) Records in Road Events set at intermediate distances within a race must comply with the conditions set under these Rules. The intermediate distances must have been measured, recorded and subsequently marked as part of the course measurement and must have been verified in accordance of these Rules.

21. Other Records

(Rule 265)

a) Games, championships, meeting and other similar records may be established by the relevant body having control over the Competition or by the LOC.

b) The record should recognise the best performance achieved at any edition of the applicable Competition in accordance with the Rules, with the exception that wind velocity readings may be ignored, if so stated in the applicable Regulations for the Competition.

22. Events for which Records are Recognised

Fully Automatically Timed performances (F.A.T.)

Hand Timed performances (H.T.)

Transponder Timed performances (T.T.)

Men

F.A.T. only:	100m; 200m; 400m; 800m; 4x100m Relay; 4x400m Relay;
F.A.T. or H.T.:	1500m; 5000m; 10,000m;
Road Races	
F.A.T. or H.T. or T.T.:	10km; Half Marathon; Marathon
Jumps:	High Jump; Long Jump; Triple Jump
Throws:	Shot Put; Discus Throw; Javelin Throw, Club Throw

Women

F.A.T. only:	100m; 200m; 400m; 800m; 4x100m Relay; 4x400m Relay;
F.A.T. or H.T.:	1500m; 5000m; 10,000m;
Road Races	
F.A.T. or H.T. or T.T.:	10km; Half Marathon; Marathon
Jumps:	High Jump; Long Jump; Triple Jump
Throws:	Shot Put; Discus Throw; Javelin Throw; Club Throw

Universal

F.A.T. only:	4x100m Universal Relay

Note (i): A women only road race can be staged by having separate women's and men's start times. The time differential should be chosen to prevent any possibility of assistance, pacing, drafting or interference, especially on courses involving more than one lap of the same section of the course.

SECTION IX - AWARDING MEDALS AND DIPLOMAS

Rule 52: Awarding Medals and Diplomas

1. At WPA Recognised Competitions only finalists are eligible for medals.

   In relay events, the four (4) athletes and guide-runner(s) of each team entitled to a medal who competed in the final shall mount the Victory Ceremony podium. Other athletes and guide-runner(s) in accordance with Rule 23.10 who competed for any of these teams in the Competition will subsequently receive their medals.

2. Athletes shall nominate the guide-runner(s) on the final entries. Only those guide-runners who have been declared by the final confirmation and who meet the following criteria shall be eligible to receive a medal alongside the medal winning athletes.

   a) In individual events where athletes with vision impairment are allowed to compete using multiple guide-runners, only those guides who have completed the full event (from the first round to finals) with the athlete shall be eligible to receive the medal alongside the athlete.

      Note (i): Assistants in field events are not eligible to receive a medal.

      Note (ii): Should the athlete declare to use more than one guide-runner in an event, then these guide-runners will not be eligible to receive a medal.

   b) in relay events, the guide-runner(s) accompanying the medal winning athlete(s) in the final shall mount the Victory Ceremony podium and receive a medal.

   Note: The athletes and guide-runners of the winning teams, who competed in any previous rounds of the competition, shall subsequently receive their medals.

3. In individual events where athletes with vision impairment are allowed to compete using multiple guide-runners, all guide-runners in track and road events (including events in which multiple guide-runners have competed), are eligible to receive diplomas according to the diploma policy as stipulated in the relevant Protocol Guide applicable to the competition.

4. Sport Class changes in competition may affect an athlete's result(s), placing and record(s)

and the impact varies in Track and Field events. Re-entry after Changes in Sport Class is subject to the Technical Delegate's approval in accordance with Rule 5.3 of these Rules.

Track Events

If the revised Sport Class is still within the eligible Sport Classes of that event, re-entry of that event is not required. Result, placing and prize won by the athlete shall stand.

If the revised Sports Class is outside the eligible Sport Classes of that event, the performance(s) achieved by the athlete shall stand but the placing and prize won by the athlete shall be void.

Field Events

If the revised Sport Class is still within the eligible Sport Classes of that event, re-entry of that event is not required. If the Points System is being used, the points which determine the placing and prize shall be recalculated against his revised Sport Class. The performance(s) achieved by the athlete may stand provided the same competition rules apply in his revised Sport Class.

If the revised Sport Class is outside the eligible Sport Classes of that event, the performance(s) achieved by the athlete may stand provided the same competition rules apply in his revised Sport Class, but the placing and prize won by the athlete shall be void.

APPENDIX 1

WORLD PARA ATHLETICS IMPLEMENT WEIGHTS FOR SPORT CLASSES

Sport Classes F11-13

Age Group	Classes	Discus Male	Discus Female	Javelin Male	Javelin Female	Shot Put Male	Shot Put Female
Open	F11-13	2.00kg	1.00kg	800gr	600gr	7.26kg	4.00kg
U/20	F11-13	1.75kg	1.00kg	800gr	600gr	6.00kg	4.00kg
U/17	F11-13	1.50kg	1.00kg	700gr	500gr	5.00kg	3.00kg

Sport Class F20

Age Group	Classes	Discus Male	Discus Female	Javelin Male	Javelin Female	Shot Put Male	Shot Put Female
Open	F20	2.00kg	1.00kg	800gr	600gr	7.26kg	4.00kg
U/20	F20	1.75kg	1.00kg	800gr	600gr	6.00kg	4.00kg
U/17	F20	1.50kg	1.00kg	700gr	500gr	5.00kg	3.00kg

Sports Classes F31-38

Age Group	Classes	Discus Male	Discus Female	Javelin Male	Javelin Female	Shot Put Male	Shot Put Female	Club Male & Female
Open And U/20	F31	NE	NE	NE	NE	NE	NE	397gr
	F32	1.00kg	1.00kg	NE	NE	2.00kg	2.00kg	397gr
	F33	1.00kg	1.00kg	600gr	600gr	3.00kg	3.00kg	NE
	F34	1.00kg	1.00kg	600gr	600gr	4.00kg	3.00kg	NE
	F35	1.00kg	1.00kg	600gr	600gr	4.00kg	3.00kg	NE
	F36	1.00kg	1.00kg	600gr	600gr	4.00kg	3.00kg	NE
	F37	1.00kg	1.00kg	600gr	600gr	5.00kg	3.00kg	NE
	F38	1.50kg	1.00kg	800gr	600gr	5.00kg	3.00kg	NE
U/17	F31	NE	NE	NE	NE	NE	NE	397gr
	F32	750gr	750gr	NE	NE	1.00kg	1.00kg	397gr
	F33	750gr	750gr	500gr	500gr	2.00kg	2.00kg	NE
	F34	750gr	750gr	500gr	500gr	3.00kg	2.00kg	NE
	F35	750gr	750gr	500gr	500gr	3.00kg	2.00kg	NE
	F36	750gr	750gr	500gr	500gr	3.00kg	2.00kg	NE
	F37	750gr	750gr	500gr	500gr	4.00kg	2.00kg	NE
	F38	1.00kg	750gr	600gr	500gr	4.00kg	2.00kg	NE

Sport Classes F40-46

Age Group	Classes	Discus Male	Discus Female	Javelin Male	Javelin Female	Shot Put Male	Shot Put Female
Open and U/20	F40,F41	1.00kg	750gr	600gr	400gr	4.00kg	3.00kg
	F42	1.50kg	1.00kg	800gr	600gr	6.00kg	4.00kg
	F43,F44	1.50kg	1.00kg	800gr	600gr	6.00kg	4.00kg
	F45,F46	1.50kg	1.00kg	800gr	600gr	6.00kg	4.00kg
U/17	F40,F41	1.00kg	750gr	500gr	400gr	3.00kg	2.00kg
	F42,	1.00kg	1.00kg	700gr	500gr	5.00kg	3.00kg
	F43, F44	1.00kg	1.00kg	700gr	500gr	5.00kg	3.00kg
	F45,F46	1.00kg	1.00kg	700gr	500gr	5.00kg	3.00kg

Sport Classes F51- 57

Age Group	Classes	Discus Male	Discus Female	Javelin Male	Javelin Female	Shot Put Male	Shot Put Female	Club Male & Female
Open and U/20	F51	1.00kg	1.00kg	NE	NE	NE	NE	397gr
	F52	1.00kg	1.00kg	600gr	600gr	2.00kg	2.00kg	NE
	F53	1.00kg	1.00kg	600gr	600gr	3.00kg	3.00kg	NE
	F54	1.00kg	1.00kg	600gr	600gr	4.00kg	3.00kg	NE
	F55	1.00kg	1.00kg	600gr	600gr	4.00kg	3.00kg	NE
	F56	1.00kg	1.00kg	600gr	600gr	4.00kg	3.00kg	NE
	F57	1.00kg	1.00kg	600gr	600gr	4.00kg	3.00kg	NE
U/17	F51	750gr	750gr	NE	NE	NE	NE	397gr
	F52	750gr	750gr	500gr	500gr	2.00kg	2.00kg	NE
	F53	750gr	750gr	500gr	500gr	2.00kg	2.00kg	NE
	F54	750gr	750gr	500gr	500gr	3.00kg	2.00kg	NE
	F55	750gr	750gr	500gr	500gr	3.00kg	2.00kg	NE
	F56	750gr	750gr	500gr	500gr	3.00kg	2.00kg	NE
	F57	1.00kg	750gr	500gr	500gr	3.00kg	2.00kg	NE

Sport Classes F61- 64

Age Group	Classes	Discus Male	Discus Female	Javelin Male	Javelin Female	Shot Put Male	Shot Put Female
Open and U/20	F61,F63	1.50kg	1.00kg	800gr	600gr	6.00kg	4.00kg
	F62,F64	1.50kg	1.00kg	800gr	600gr	6.00kg	4.00kg
U/17	F61,F63	1.00kg	1.00kg	700gr	500gr	5.00kg	3.00kg
	F62, F64	1.00kg	1.00kg	700gr	500gr	5.00kg	3.00kg

APPENDIX 2

Classification Hierarchy Table 1 – Paralympic Games and World Championships

Class	100m	200m	400m	800m	1500m	5000m	10000m	Marathon	High Jump	Triple Jump	Long Jump	Discus	Shot Put	Javelin	Club	Class
11					*	*	*	*	*			*	*	*		11
12																12
13																13
20																20
31																31
32																32
33													Only Female			33
34																34
35	35 & 38										35 & 38	35 & 38 Only Female	35 & 38 Only Female	35 & 38 Only Female		35
36	36 & 38										36 & 38	36 & 38 Only Female	36 & 38 Only Female	36 & 38 Only Female		36
37	37 & 38										37 & 38	37 & 38 Only Female	37 & 38	37 & 38 Only Female		37
38	35, 36 or 37										35, 36 or 37	35, 36 or 37 Only Female	See Above Breakdowns	35, 36 or 37 Only Female		38
40																40
41																41
61																61
42																42
63																63
43																43
62																62
44																44
64																64
45																45
46																46
47																47
51	**	**	**	**								****		****		51
52																52
53					***	***	***	***					*****			53
54																54
55																55
56																56
57																57

Grouping classes on basis of Classification Hierarchy and/or technical rules.
Non existing class/event combination (2018).

* Class 11 can compete with Class 12. Class 12 can compete with Class 13. However, Class 11 should not compete with Class 13.
** Possible combinations: T51-53 or T52-54.
*** T53 and T54 compete as a combined event.
**** Possible combinations: any grouping of three consecutive classes.
***** Possible combinations: any grouping of three consecutive classes within 53-57 (females) or 54-57 (males).

APPENDIX 2

Classification Hierarchy Table 2 – Regional Championships and Regional Games

Class	100m	200m	400m	800m	1500m	5000m	10000m	Marathon	High Jump	Triple Jump	Long Jump	Discus	Shot Put	Javelin	Club	Class
11					*	*	*	*	*			*	*	*		11
12																12
13																13
20																20
31																31
32																32
33																33
34																34
35	35 & 38															35
36	36 & 38															36
37	37 & 38															37
38	35, 36 or 37															38
40																40
41																41
61																61
42									42, 44, 63, 64							42
63																63
43																43
62																62
44									42, 44, 63, 64							44
64																64
45																45
46																46
47																47
51																51
52	**	**	**	**												52
53					***	***	***	***								53
54												****		****		54
55													*****			55
56																56
57																57

Grouping classes on basis of Classification Hierarchy and/or technical rules.
Non existing class/event combination (2018).

* Class 11 can compete with Class 12. Class 12 can compete with Class 13. However, Class 11 should not compete with Class 13.
** Possible combinations: T51-53 or T52-54.
*** T53 and T54 compete as a combined event.
**** Possible combinations: any grouping of three consecutive classes.
***** Possible combinations: any grouping of three consecutive classes within 53-57 (females) or 54-57 (males).

World Para Athletics

Adenauerallee 212-214
53113 Bonn, Germany

Tel. +49 228 2097-200
Fax +49 228 2097-209

info@WorldParaAthletics.org
www.WorldParaAthletics.org

© 2022 International Paralympic Committee – ALL RIGHTS RESERVED
Photo ©: Getty Images